CRANE MAINTENANCE

TRAINING COURSE

FOR THE

CLARKE CHAPMAN MARINE

DIESEL HYDRAULIC CRANES ON BOARD

THE FPSO 'VIDAL DE NEGREIROS'

INDUSTRIAL POWER GROUP

CLARKE CHAPMAN MARINE

CLARKE CHAPMAN LIMITED
PO Box 9, Saltmeadows Road, Gateshead, Tyne and Wear NE8 1SW
Telex: 53239 (CCLTDG), Fax: 0191-477 1009
Telephone: 0191-477 2271

OPERATIONS AND MAINTENANCE MANUAL

MANUAL REFERENCE: 21900M - "A" Set REVISION: 0

For:

22 tonne Self-Contained, Diesel Hydraulic, Rope Luffing, Pedestal Turret Deck Crane.

CRANE TAG NR. GD.526003.

Order Ref. VN.GSU-005A/96. Clarke Chapman Crane "A".

VOLUME A2(i) (LARGE FORMAT DRAWINGS) (Volume 1 of 2)

In respect of equipment for:

Floating Production Storage and Offloading Vessel (FPSO) - Vidal De Negreiros Unit P-XXXI of the Petrobras Albacora Field Development in the Campos Basin.

Client: IVI International Ltd., S.A.
Rio-de Janeiro, Brazil.

Note: Of "A" Set Volumes (4 sets)
2 Sets supplied Small Format Drawings (1 Volume per set)
2 Sets supplied Large Format Drawings (2 Volumes per set)
at Petrobras request.

CCM Refs: 86.421/86.422/21900M

FWH/D

Section C3-2

Fluids Recommendations

Document Ref - SEBU.6251-05 (17pp)
of June 1996

This one day course is designed to familiarise crane operators with the layout and operation of the three Clarke Chapman cranes fitted on board the F.P.S.O. Vidal de Negreiros.

It is assumed that the crane drivers attending the course have valid operators certificates and are experienced crane operators.

The morning part of the course will be held in a lecture room and will cover the following :

Crane layout

Crane general description and duties

General operating instructions

Recommendations for the safe use of the cranes

Normal start up instructions

Operating instructions

Crane limits

Emergency load lowering

Warning annunciator panel

Mipeg operation

Crane shut down procedure

The afternoon part of the course will be spent on the cranes where the operator will be able to familiarise himself with the crane and cab layout, start the crane, carry out pre-checks and operate the crane.

INDUSTRIAL POWER GROUP

CLARKE CHAPMAN MARINE

CLARKE CHAPMAN LIMITED
PO Box 9, Saltmeadows Road, Gateshead, Tyne and Wear NE8 1SW
Telex: 53239 (CCLTDG), Fax: 0191-477 1009
Telephone: 0191-477 2271

COPYRIGHT

All the information disclosed in these Manuals, Publications and Lists is to be considered Commercial in Confidence and proprietary to Clarke Chapman Marine and/or the Owner as is applicable.

Communication of the contents or reproduction to any Third Party of any part of any text or drawings by any means, other than to Clarke Chapman Marine and/or the Owner must not take place without prior, written consent of and from Clarke Chapman Marine, and/or the Owner.

1.2 Health and Safety - Safe Operation of Equipment

It has been and remains the policy of this Company to ensure our equipment is designed and constructed so as to be safe and without risk to health and safety when operated in what we consider to be a normal working environment.

It is recommended the end user instruct and train their selected operator personnel in the safe and efficient use of the equipment supplied and to ensure that only approved personnel have access to, awareness of, and permission to use such equipment. All servicing, cleaning, maintenance, repairs, dismantling, reassembly and commissioning of components and operational equipment shall be carried out by technically competent personnel, and supervisors, all of whom shall be provided with protective clothing, footwear, eye protection, head and ear protection appropriate to their task and covered by current Health and Safety legislation.

We will be pleased to advise the customer, if so requested, upon the particular environment in which the customer intends to use the equipment.

For further information relating to the operation of the equipment the customer shall refer to:

a) The technical specification, maintenance, and operation instructions as maybe provided under control system and control equipment documentation.

b) I.L.O. Code of Practice - Safety and Health in Dock Work.

c) Lloyds Register of Shipping - Code of Practice for the Construction and Survey of Ships' Cargo Handling Gear.

Our suppliers of the following component items draw attention to certain information concerning these components.

a) Brake Components. From 1996 brake components supplied by Clarke Chapman Marine do not contain asbestos fibres. It is recommended that brake components should be vacuum cleaned before dismantling so as to avoid risk of brake dust inhalation by maintenance and servicing personnel.

b) Components manufactured from leaded steels, leaded bronze, certain alloy and coated steels. The heating, cutting, burning or welding of these steels may give rise to certain health risks. Adequate ventilation, protective clothing, hygiene and safety procedures shall be adopted and reference should be made to H.M. Factory Inspectorate Code of Practice for Health Precautions for lead and Department of Employment Technical - Data Note 2/73 Threshold Limit Values.

c) Electric Cables. Care shall be taken to avoid undue concentrations of corrosive and toxic fumes arising from the heating of plastic and elastomeric insulating and sheathing compounds, polyvinyl acetal and epoxy enamelled insulations, from lead sheathes as well as fluxes, solders and plumbing metal used in jointing operations.

d) Safety on Relief Valves. Alterations to these valves shall only be carried out by suitably qualified personnel who are able to assess the consequences of carrying out such an operation and shall not be altered by an amount exceeding plus or minus 5% without reference to the manufacturer.

e) Oils and Greases for lubrication purposes. Inhalation shall be avoided and adequate ventilation provided since lubricants used for equipment running at high temperature can break down to give fumes and smoke. Protective clothing shall be worn and changed as soon as possible to prevent prolonged contact with the skin. Splashes on the skin shall be removed by washing or by the use of a skin cleanser.

f) Polytetrafluoroethylene (ptfe) Care shall be taken when handling ptfe based lubricants since ptfe decomposes under heat and if deposited on cigarettes can cause symptoms similar to influenza when inhaled.

g) Care shall be taken to prevent loose items of clothing or equipment from being caught by moving ropes or other moving parts of machinery.

h) Industrial gloves shall be worn when handling ropes.

i) Electrical maintenance, rewiring or any operations on electrical equipment shall be supervised by competent personnel in accordance with good engineering practice, established codes of practice, statutory requirements and the I.E.E. Wiring Regulations as applicable.

j) Care shall be taken to avoid using a megger on a circuit which incorporates any transistor, thyristor, diode or power rectifier as the high voltage from the megger can instantly destroy these devices. A multi-range meter shall be used for measuring resistance values in such cases. This warning is also applicable to power rectifiers supplying control and excitation circuits.

k) Use of any cleaning fluids and cleaning materials shall be within a well ventilated and monitored area, and used only by technically competent personnel.

l) It is essential due notice is taken by all personnel of warning signs which indicate high voltage or other hazards.

m) Coupling guards over rotating equipment shall not be removed before the power supply is isolated.

n) Inspection covers shall only be removed by trained/experienced personnel.

1.3.0 GENERAL DESCRIPTION AND DUTIES.

Each crane is of the self contained diesel/hydraulic, rope luffing, pedestal type, suitable for operating in tropical offshore conditions. Each crane incorporates a diesel driven hydraulic power pack and independent hydraulic drives for each crane motion, with full control from spring centred proportional controllers located in the drivers cabin.

1.3.1 Crane Boom - The crane boom consists of a fabricated tubular lattice construction sealed against the ingress of moisture and designed to withstand the shock loadings during offshore operation. The boom structure is assembled in five sections with a walkway fitted along the full length of the boom on one side with handrails and toe boards. The midship crane booms are extended at the boom head to incorporate the crane's whip hoist.

1.3.2 Crane Mast - The crane mast comprises a fabricated crane base structure supporting a welded steel mast, an enclosed machinery house, and a driver's cabin. Incorporated within the welded steel mast and the machinery house are the crane drive machinery and diesel/hydraulic power pack.

1.3.3	Crane Duties	-	Midship cranes
	Main Hoist Capacity	-	22 Tonnes at 25 metres radius - boat lift 20 Tonnes at 45 metres radius - deck lift Minimum radius 12 metres
	Duty (2 Fall)	-	22 Tonnes at 20 metres per minute Light Hook at 30 metres per minute
	Whip Hoist capacity	-	5 Tonnes at 47metres radius - boat lift Maximum radius 47 metres
	Duty (1 Fall)	-	5 Tonnes at 80 metres per minute Light Hook at 150 metres per minute
	Boom Hoist	-	10 Tonnes at 21 metres per minute Maximum to minimum radius 90 secs. (approx.) Light Hook at 37.80 metres per minute Maximum to minimum radius 50 secs. (approx.)
	Slew	-	22 Tonnes at 1 revolution per minute 360° Unrestricted slew arc

1.3.10 (a)

MIDSHIP CRANES - MAIN HOIST LOAD CHART No 1			
RADIUS	**BOOM ANGLE**	**SAFE WORKING LOAD - EXC. WEIGHT OF HOOK**	
		PLATFORM LIFT	**BOAT LIFT OPERATING IN 2.1 Metre Significant Wave Height 5.4 Second Wave Period**
			Ship Motion: Roll Period 11.7 second **Roll Angle ± 1.5°** **Pitch Angle ± 0.55°** **Wind Velocity: 35 knots**
12 metre	78.444°	20 tonne	22 tonne
15 metre	74.499°	20 tonne	22 tonne
20 metre	67.730°	20 tonne	22 tonne
25 metre	60.597°	20 tonne	22 tonne
30 metre	52.898°	20 tonne	14 tonne
35 metre	44.280°	20 tonne	10.75 tonne
40 metre	33.975°	20 tonne	8.5 tonne
45 metre	19.256°	20 tonne	7 tonne

F.3.10(a)

MIDSHIP CRANES - MAIN HOIST LOAD CHART No 2			
RADIUS	**BOOM ANGLE**	**SAFE WORKING LOAD - EXC. WEIGHT OF HOOK**	
		PLATFORM LIFT	**BOAT LIFT OPERATING IN 3.0 Metre Significant Wave Height 8.0 Second Wave Period**
			Ship Motion: **Roll Period 11.7 second** **Roll Angle ± 2.25°** **Pitch Angle ± 0.55°** **Wind Velocity: 35 knots**
12 metre	78.444°	20 tonne	18 tonne
15 metre	74.499°	20 tonne	18 tonne
20 metre	67.730°	20 tonne	18 tonne
25 metre	60.597°	20 tonne	18 tonne
30 metre	52.898°	20 tonne	11 tonne
35 metre	44.280°	20 tonne	8 tonne
40 metre	33.975°	20 tonne	6 tonne
45 metre	19.256°	20 tonne	5 tonne

1.3.10.a.

MIDSHIP CRANES - MAIN HOIST LOAD CHART No 3			
RADIUS	**BOOM ANGLE**	**SAFE WORKING LOAD - EXC. WEIGHT OF HOOK**	
		PLATFORM LIFT	**BOAT LIFT OPERATING IN 4.0 Metre Significant Wave Height 11.0 Second Wave Period**
			Ship Motion: Roll Period 11.7 second **Roll Angle ± 2.25°** **Pitch Angle ± 1.0°** **Wind Velocity: 35 knots**
12 metre	78.444°	20 tonne	16 tonne
15 metre	74.499°	20 tonne	16 tonne
20 metre	67.730°	20 tonne	16 tonne
25 metre	60.597°	20 tonne	16 tonne
30 metre	52.898°	20 tonne	9.5 tonne
35 metre	44.280°	20 tonne	6.75 tonne
40 metre	33.975°	20 tonne	5 tonne
45 metre	19.256°	20 tonne	4 tonne

1.3.10.(b)

MIDSHIP CRANES - WHIP HOIST LOAD CHART No 1			
RADIUS	**BOOM ANGLE**	**SAFE WORKING LOAD - EXC. WEIGHT OF HOOK**	
		PLATFORM LIFT	**BOAT LIFT OPERATING IN** **2.1 Metre Significant Wave Height** **5.4 Second Wave Period**
			Ship Motion: Roll Period 11.7 seconds **Roll Angle ± 1.5°** **Pitch Angle ± 0.55°** **Wind Velocity: 35 knots**
13.41 metre	78.444°	5 tonne	5 tonne
15 metre	76.433°	5 tonne	5 tonne
20 metre	69.954°	5 tonne	5 tonne
25 metre	63.158°	5 tonne	5 tonne
30 metre	55.877°	5 tonne	5 tonne
35 metre	47.833°	5 tonne	5 tonne
40 metre	38.475°	5 tonne	5 tonne
45 metre	26.251°	5 tonne	5 tonne
47 metre	19.256°	5 tonne	5 tonne

MIDSHIP CRANES - WHIP HOIST LOAD CHART No 2			
RADIUS	**BOOM ANGLE**	**SAFE WORKING LOAD - EXC. WEIGHT OF HOOK**	
		PLATFORM LIFT	**BOAT LIFT OPERATING IN** **3.0 Metre Significant Wave Height** **8.0 Second Wave Period**
			Ship Motion: Roll Period 11.7 seconds **Roll Angle ± 2.25°** **Pitch Angle ± 0.55°** **Wind Velocity: 35 knots**
13.41 metre	78.444°	5 tonne	4.85 tonne
15 metre	76.433°	5 tonne	4.80 tonne
20 metre	69.954°	5 tonne	4.65 tonne
25 metre	63.158°	5 tonne	4.50 tonne
30 metre	55.877°	5 tonne	4.35 tonne
35 metre	47.833°	5 tonne	4.20 tonne
40 metre	38.475°	5 tonne	4.05 tonne
45 metre	26.251°	5 tonne	3.95 tonne
47 metre	19.256°	5 tonne	3.90 tonne

1.3.10 (4)

1-3-10 (9).

MIDSHIP CRANES - WHIP HOIST LOAD CHART No 3			
RADIUS	**BOOM ANGLE**	**SAFE WORKING LOAD - EXC. WEIGHT OF HOOK**	
		PLATFORM LIFT	**BOAT LIFT OPERATING IN** ***4.0 Metre Significant Wave Height*** **11.0 Second Wave Period**
			Ship Motion: Roll Period 11.7 seconds **Roll Angle ± 2.25°** **Pitch Angle ± 1.0°** **Wind Velocity: 35 knots**
13.41 metre	78.444°	5 tonne	4.30 tonne
15 metre	76.433°	5 tonne	4.25 tonne
20 metre	69.954°	5 tonne	4.15 tonne
25 metre	63.158°	5 tonne	4.00 tonne
30 metre	55.877°	5 tonne	3.85 tonne
35 metre	47.833°	5 tonne	3.75 tonne
40 metre	38.475°	5 tonne	3.65 tonne
45 metre	26.251°	5 tonne	3.55 tonne
47 metre	19.256°	5 tonne	3.50 tonne

SECTION 2.0

MIDSHIP CRANES

Tag Nrs. i) GD.526002A. (Aft)
(CCM Ref. Crane 'C')

ii) GD.526002B. (Fwd.)
(CCM Ref. Crane 'B')

2.1 General Operating Instructions.

2.2 Recommendations for Safe Use of the Cranes.

2.3 Normal Start Up Instructions.

- 2.3.1 Daily check list before operation.
- 2.3.2 Engine start.
- 2.3.3 Checks after Engine start.
- 2.3.4 Daily Check List - structural.

2.4 Operating Instructions.

- 2.4.1 Motion controls.
- 2.4.2 Brakes.
- 2.4.3 Limits (Hoist, luff and slack rope)
- 2.4.4 Handling of heavy loads.
- 2.4.5 Platform lifts.
- 2.4.6 Emergency Load Lowering (no power).
- 2.4.7 Emergency Boom Lowering.
- 2.4.8 Lighting.

2.5 Electrical Systems Operation.

- 2.5.1 Electric supply.
- 2.5.2 Control Systems.
  - (i) Crane Control Switch.
  - (ii) Position 1 - Engine 'ON'.
  - (iii) Position 2 - Controls 'ON'.
  - (iv) Position 3 - Fuel 'ON'
  - (v) Engine Shut Down.
  - (vi) Emergency Stop.
  - (vii) Overspeed (automatic).
  - (viii) Emergency Release (manual).
  - (ix) Select Switch (SW11)
    - a) Position 3. Not to be used.
    - b) Position 2. Normal running.
    - c) Position 1. Wave following.

1.3.4 Crane Duties - Turret Crane.

Main Hoist Capacity	-	22 Tonnes at 38 metres radius - deck lift Maximum radius 38 metres Minimum radius 11 metres
Duty (2 Fall)	-	22 Tonnes at 20 metres per minute Light Hook at 30 metres per minute
Boom Hoist	-	10 Tonnes at 18 metres per minute Maximum to minimum radius 90 secs. (approx.) Light Hook at 32.4 metres per minute Maximum to minimum radius 50 secs. (approx.)
Slew	-	22 Tonnes at 1 revolution per minute. 360° Unrestricted slew arc

1.3.5 Crane Hydraulic/Control System

The direction and speed control of the crane hoist, luff and slew is provided by spring return "dead man" controllers located inside the driver's cabin allowing the driver independent or simultaneous control of the crane motions. The "dead man" spring return feature on each controller returns the levers to their neutral position and automatically applies the respective crane motion spring applied/hydraulic release parking brakes. Adjacent to the controllers ~~are~~ is ~~shrouded~~ buttons which when activated in event of an emergency will automatically stop all crane motions.

The crane control system incorporates an emergency release device (Manual Operated Gross Over moment Protection). Adjacent to the crane controllers is a shrouded button which when activated in event of an emergency (i.e. if the crane hook is trapped on the supply boat moving away from the crane/vessel) sets the hoist to a reduced line pull and allows the hoist to pull out at a reduced line tension thus preventing excessive moment/load on the crane. If the hook remains trapped on the supply boat the rope will spool from the drum and the rope anchorage releases the rope.

1.3.6 The Electrical Equipment comprises:

a) Collector Column Assembly - This is mounted on the crane rotational axis, with a pneumatic airline passing through the centre of the assembly. Collector gear rings are provided, with 4 metre long cable tails for connection to the vessels separate supplies as follows:-

2 Core - 220 V/1 ph/60 Hz. 60 amps.
Single Core - Main Earth
2 Core - 125 V D.C. 10 amps
4 Core - Spare (5A 220V/60 Hz)

A cable tray is installed within the pedestal to accommodate the 4 metre long cable tails.

2.5.3 Cavitation Protection.

(i) Main Hoist.
(ii) Luff.
(iii) Whip Hoist.

2.5.4 Limits with Main Hoist selected.

(i) Main Hoist up.
(ii) Main Hoist lower.
(iii) Slack rope detection.
(iv) Main Hoist (ultimate hoist - anti two block)

2.5.5 Limits with Whip Hoist selected.

(i) Whip Hoist up.
(ii) Whip Hoist lower.
(iii) Slack rope detection.
(iv) Whip Hoist ultimate hoist - anti two block.
(v) Luff in slow down limit.
(vi) Luff in limit (12 metres).
(vii) Luff out limit.
viii) Luff in limit.

2.6 Audible Warning Horn.

2.7 Annunciator System - Indication Lights.

2.8 Battery Back up System - Referral.

2.9 Safe Load Indicator System (Mipeg 500) - Referral.

2.10 Diesel Engine Control System - Referral.

2.11 Crane Shut Down.

2.1 GENERAL OPERATING INSTRUCTIONS.

(i) The crane must not be operated by any person who is not familiar with the cranes limitations, safety equipment and operating instructions.

(ii) Do not operate the crane if any limits or safety equipment are out of order.

(iii) The crane is designed only to be used for vertical lowering and vertical lifting of loads. The crane is not designed for pulling, dragging or nipping at fixed loads.

(iv) Do not use the limit switches as stopping devices, even limit switches can fail!

(v) Never lift a load in excess of the rated load capacity chart. Use the capacity selection for boat lifts. Pay attention to the overload system.

(vi) Never use the high speed if the hook load exceeds the high speed capacity. Pay strict attention to the cabin affixed warning.

(vii) Operate all the motion controls in such a manner that the motions stop without jerking. Use extra care with the slew motion to avoid dangerous swinging of the load.

(viii) Observe the engine tachometer during the operation to avoid stalling or load run-away.

(ix) Never follow a supply boat with the boom for more than two metres, unless the load to be lifted is well within the larger radius (see also paragraph 2.1 (v).

(x) WARNING! Never use the Emergency Release button unless a hook is attached to a boat which is moving away from the platform as THIS BUTTON RELEASES THE LOAD COMPLETELY AND INSTANTLY.

(xi) Report any cases of excessive wear, faults, unusual noise or other irregularities immediately to supervisor.

(xii) Never alter any equipment or change any of the pressure settings without prior written permission from the manufacturer.

(xiii) Never heat, weld or oxy cut any of the boom sections or any other structural components without prior permissions and procedures, in writing from the manufacturer.

(xiv) WARNING Do not switch the operation selector to "Wave Following" with a load suspended on the hook. The load will fall under such circumstances.

2.2 RECOMMENDATIONS FOR THE SAFE USE OF THE CRANE

(i) The crane should only be operated by personnel with an approved operators licence.

(ii) The operator must be physically and mentally fit, otherwise he should not engage in crane operations.

(iii) The crane operator should not have his attention diverted while operating the crane.

(iv) The crane operator should not start the crane operation until the signal man or the load is in full view, or radio contact has been established with the signalman.

(v) The operator must pay attention to the appointed signalman only.

(vi) OBEY AN EMERGENCY SIGNAL AT ALL TIMES, NO MATTER WHO GIVES IT

(vii) If there are any doubts as to safety the operator should refuse to handle loads until safe conditions exist.

(viii) The operator should not leave the operating seat when a load is on the hook.

(ix) Caution to be used when lifting submerged loads. The platform supervisors permission must be obtained for all submerged lifts.

(x) Loads should never be swung over personnel. The warning horn should be used when in the proximity of personnel.

(xi) Taglines should be used when handling bulky loads.

(xii) Rope should not be payed out once the hook has reached the load to be lifted.

(xiii) No load will be lifted beyond the maximum boom radius.

(xiv) Equipment should be kept in a clean condition in order to avoid accidents.

2.3 NORMAL START UP INSTRUCTIONS.

Before a daily engine start the following check list should be used.
If required refer to the Lubrication Chart Volume 2 (Section 4) for details of lubricants and capacities.

2.3.1 Daily Check List (Before Operation)

(i) Check the air receiver pressure (minimum 7 bar).
(ii) Check the diesel fuel level in the tank. Check the sight glass adjacent to the engine in the machinery house.

(iii) Check the engine crankcase Lube oil level.

(iv) Check the water level in the radiator. Maintain the level to the base of the fill pipe.

(v) Check the hydraulic reservoir oil level - do not overfill.

(vi) Check the splitter gearbox oil level.

(vii) Check the oil levels in all gearboxes slew drives and the hoist brakes.

(viii) Check that all the ropes are correctly wound on the drums.

(ix) Check all the lighting. Including the aviation lights, the floodlights and the access lights.

(x) Check battery charger unit.

2.3.2 ENGINE START

(i) It is recommended that the daily initial crane engine starts should be performed at the machinery house control station in order to observe the engine gauges, the hydraulic oil filters and the hydraulic systems behaviour.

Subsequent engine stops and starts may be performed from the operator's cabin.

(ii) Before starting the engine the electrical control system and the safety circuits are to be energised.

NOTE! It is necessary to turn the normally open selector switch located in the operator's cabin on the left (port) panel, to the 'Engine Run' position, using the selector switch provided.

Ensure that the emergency stop button is released. Set the engine throttle control lever to the low idle position.

(iii) Ensure that the air shut down system (Rig Saver) is cocked in the open position.

(iv) To start the engine press the air valve control. As soon as the engine starts release the valve.

Should the engine fail to start refer to the Diesel Engine Operation Manual Volume 3.

2.3.3 CHECKS AFTER ENGINE START.

The following should be checked after the engine has started.

(i) WARNING If the hydraulic oil pressure of 60 bar is not indicated within 5 seconds, stop the diesel engine and have any necessary repairs made.

Observe the oil pressure gauge immediately after starting.

(ii) Allow the engine oil pressure to reach the normal operating range (usually several minutes). Inspect for leaks. The required oil pressures should be between 2.76 bar (40 psi) minimum 6.07 bar (88 psi) maximum.

(iii) Check the tell-tale indicators on the hydraulic filters.

(iv) Check for leakage in the air and hydraulic systems.

(v) Check the engine instrument panel assembly for all gauge functions, in respect of operating temperatures, fuel pressure and oil pressure. (Refer to Diesel Engine Operating and Maintenance Manuals in Volume 3).

(vi) Check the annunciator panel illuminating functions.

(vii) Check the operation of the hoist-up limit, the luff-out limit, and the luff-in, the deceleration valve and the stop limit.

(viii) Check the boom buffers for equal extension, when the boom is not contacting the buffers.

(ix) Check the operation of the engine stop/start, and the exhaust emission.

(x) Check the operation of the hoist brakes.

(xi) Check the window wiper and the washer container level. Renew the wiper blades if required.

(xii) Observe the operation of Mipeg safe load indicator.

2.3.4 Daily Check List - Structural.

During each shift the following list of items should be inspected, and appropriate action taken.

(i) Visually inspect the following:-

a) The crane boom for damage.
b) All wire ropes for deterioration and damage.
c) Run ropes with no load on hook. Check for correct rope spooling on drums.
d) All fire fighting appliances present and in serviceable condition.

(ii) Check that all loose gear in the cabin is correctly stowed.

(iii) Check for loose or missing bolts and fastenings.

(iv) Inspect the pneumatic and the hydraulic systems for leaks or damage.

(v) Check the air receiver pressure and check for any air leaks.

(vi) Visually inspect the machinery housing for signs of spillage and leaks.

(vii) Check the hydraulic system pressures and the temperatures are within the normal operating range.

(viii) Check the condition of the radiator cooling fan drive belts and that they have correct tension.

(ix) Check all the machinery in the house for loose covers or missing parts.

2.4 OPERATING INSTRUCTIONS.

2.4.1 Motion Controls

A joystick type control lever on the left (port) panel controls the luff and slew motion. The lever movement is relative to the motion movement, i.e. push the lever forward and the boom lowers or push the lever to the left and the crane swings left. The speed of each motion is proportional to the lever deflection from the central position.

The luff brake is automatically released when the lever is moved forward or backwards. The slew brake is similarly released when the lever is moved to the left or to the right.

Both main and whip hoist control levers are mounted on the right (starboard) panel, controls the main hoist and whip hoist motion.

All levers are of the spring return to neutral position type.

2.4.2 Brakes.

The hoists, luff and slew brakes are released whenever the motion control levers are moved away from their neutral position. All of these brakes automatically apply when the control levers are return to neutral.

The luff winch is fitted with a 'spragg' brake to prevent unintentional lowering of the boom to ensure positive control of lifting the load at all times.

In the case of cavitation in the hoist on the luff system the brake is immediately applied to prevent the load or the boom from falling.

2.4.3 LIMITS

(i) Hoist

The hoist up limit which is mounted on the hoist drum should be set to prevent overhoisting of the hook at the maximum radius condition. This limit is de-activated by lowering the hook.

(ii) Luff

The luff out limit is set for a maximum operating radius of 38 metres. This can be overridden, using the luff override key switch on the control panel, in order to place the boom in the rest. The hoist up limit will prevent this action if it is activated and the hook would then need to be lowered. The luff-out limit is deactivated by luffing up to 38 metres radius.

There are two luff-in limits.

The first is a luff-in deceleration valve and limit, comprising a hydraulic valve limit which slows the luff-in speed as it approaches minimum radius, stopping the luff motion at the minimum radius of 12 metres.

The other is the ultimate luff-in limit, which is an electrical spindle limit switch mounted on the end of the luff winch. This is set to operate when 100 mm of travel still remains on the boom buffers. When the ultimate limit is activated, it cuts out the engine, and stops the luff, applying the brakes and the luff ratchet. To reset this limit will require the services of a competent person. The rig-saver engine shutoff valve will have to be manually reset, and the limit will have to be overridden by a competent person before the crane can be put back into action. The purpose of this ultimate limit is to protect the crane and the boom from serious damage should a malfunction occur in other safety features.

WARNING! If this limit trips, the cause should be investigated and corrected before the crane is put back into service.

SAFETY REMINDER: Remember the cranes have no slew limit restrictions.

(iii) Slack Rope Limits

If the rope becomes slack on a drum, the slack rope limit will operate to protect the crane from rope damage. To overcome the limit operation, the rope should be coiled properly on the drum and excessive speeds with an empty hook avoided - especially in the range of maximum hook height.

2.4.4 HANDLING OF HEAVY LOADS.

(i) When raising heavy loads the engine should be run at full speed to give maximum power. The control lever should be pulled slowly towards the driver to steadily accelerate the load within the power capacity of the engine, if the engine speed tends to fall below 1700 r.p.m. as read on the tachometer in the cab console then the lever must be eased back to reduce the engine loading. See also paragraph 2.4.5 following for loading and the Mipeg discriminator.

(ii) Lowering speeds for heavy loads (above 3/4 rated load capacity for the winch) should be limited by the use of the hoist control lever. This ensures better and safer control of the heavy load. Engine and pump overspeed can cause pump damage and cavitation together with the possibility of the load accelerating out of control.

(iii) Precaution should also be taken when Luffing Out with a heavy load by limiting the control lever movement. When Luffing In simultaneously with hoisting heavy loads, particular care should be taken with the controls to avoid stalling the engine.

The engine top speed is nominally 1900 r.p.m. Under no load the engine will speed up to 1800 r.p.m. and will fall off to 1700 r.p.m. under full load. Should the revolutions continue to fall beyond 1700 r.p.m. then the engine is OVERLOADED and the driver must immediately reduce speed on the respective crane controls until the engine speed returns to 1700 r.p.m. Otherwise the engine will stall.

When lowering heavy loads, under no circumstances should the engine be allowed to overspeed beyond 1800 r.p.m. It will be necessary to reduce speed with the engine throttle as well as the hoist control lever to achieve this with a heavy load.

If the diesel engine stalls, cavitation will result and all brakes will come 'ON'.

2.4.5 PLATFORM LIFTS

For Platform lifts the "wave" button on the Mipeg 500 should be set to show 'P' to give safe load indication.

Under no circumstances are the platform lift chart values to be used for lifting from floating vessels. Permission from supervisory authority is to be requested to review lift conditions when other than flat, calm lift conditions apply.

The load chart under 'Platform Lifts' indicates the maximum load allowable relative to the boom angle.

Indication of the allowable and actual load as well as the boom radius should, however, be read off the MIPEG Load Indicator, which will warn the operator when the load is near or above the allowable load. Be sure that the MIPEG equipment is reading and adjusted for the correct number of falls.

The MIPEG 500 Crane Load and Moment Indicator System gives a visual and audible warning of overload - See separate Instructions Volume 1 (Section 3a (xvi).

The operator must be fully familiar with the MIPEG 500 Indicator procedures before operating any crane.

2.4.6 EMERGENCY LOAD LOWERING (NO POWER)

Fully open the needle valve which connects the A and B legs of the hoist motion closed loop - situated on the pump port block.

Remove the emergency quick release coupling situated in the motor brake line. Connect the hydraulic hand pump and hose.

Close the relief valve on the hydraulic hand pump, gentle operation of the pump will then release the brake and allow the load to creep down, the brake can be re-applied by opening the relief valve.

After lowering the load, remove the hand pump and re-connect the quick release coupling. Tighten up the needle valve.

CAUTION Check regularly that the needle valves are closed tightly as loss of performance and overheating can result if the valves are left even slightly open.

2.4.7 EMERGENCY BOOM LOWERING.

Operation to lower the boom is as follows:-

Fully open the needle valve which connects the A and B legs of the Luff motion closed loop - situated on the pump port block.

Remove the emergency quick release couplings situated in the brake line and luff spragg line, adjacent to the appropriate unit. Connect a hand pump and hose to each line.

Close the relief valve on the hydraulic hand pump, operation of the pump will lift the ratchet.

Close the relief valve on the luff motor brake hand pump, gentle operation of the pump will then release the brake and allow the boom to creep down, the brake can be re-applied by opening the relief valve.

After lowering the boom, remove the hand pumps and re-connect the quick release couplings. Tighten up the needle valve.

CAUTION Check regularly that the needle valves are closed tightly. Loss of performance and overheating result if the valves are even slightly open.

2.4.8 LIGHTING

The lighting systems available are:

a) Floodlights
b) Cablights
c) Aviation Lights
d) Emergency self contained lights
e) Lights on access ways; inside the pedestal in the machinery house.

All lights can be isolated if required, but in the case of emergency lighting for walkways and aviation lights such isolation would be for maintenance purposes only.

Non-emergency lights have switch controls for on/off normal running facilities.

2.7 INDICATION LIGHTS (ANNUNCIATOR PANEL) - MIDSHIP CRANE.

The following control/operation functions are monitored and sound an alarm in the operator's cabin if a fault occurs.

See also Volume 1, Section 3a(xi) for specific Annunciation details.

Engine Oil Pressure Low 1A	Engine Oil High Temperature 1B	Engine Overspeed 2A	Hydraulic Oil Temperature High 2B
Engine Water Temperature High 1C	Engine Exhaust Gas Temperature High 1D	Hydraulic Oil Level Low 2C	Emergency Release Operated 2D
Battery Healthy 3A	Main Hoist Limits and Two Block Operated 3B	Hoist and Luff Cavitation 4A	MIPEG Overmoment 4B
Whip Hoist Limits and Two Block Operated 3C	Luff Limits Operated 3D	Slack Rope 4C	Spare 4D

NOTE:

The numbers on the above table are for cross-referencing in the manual only and do not appear on the annunciator display panel.

Alarm - Will sound when any of functions 1A - 4D operate.

Accept - Operation of the push button will cancel the alarm. The alarm will re-sound on future operation of any function.

Test - Operation of the push button will illuminate all functions.
Replace lamp for any function which does not illuminate.

TAG NOS. GD.526002A and GD.526002B - MIDSHIP CRANES.

SEQUENCE	INDICATOR LIGHT	FUNCTION	RESULTING FROM	REMEDIAL ACTION
1	1A	Engine oil pressure low	Oil pressure is below normal (20 psi)	Check oil level initially and then for other causes if necessary.
2	1B	Engine oil temperature high.	Oil temperature above normal (110°C)	Check oil level initially and then for other causes if necessary.
3	1C	Engine water high temperature	Engine water temperature above normal (90°C)	Check radiator water level initially.
4	1D	Engine exhaust high temperature	Exhaust temperature above normal (427°C)	Check fuel injection system settings.
5	2A	Engine overspeed	Engine speed above normal (2100 rpm)	Engine shuts down. Re-start engine.
6	2B	Hydraulic oil high temperature	Oil temperature is above normal (75°C)	Allow to cool below 40°C. Check operation of oil heater/ thermostat.
7	2C	Hydraulic oil level low	Oil lever below recommended level	Replenish to correct level.
8	2D	Emergency release operated.	Operation of PB2 as load is snagged on supply boat.	Releases snagged load.
9	3A	Battery healthy	Operating satisfactory	If no light shows, press lamp test button. If light operates check charger output at terminals.
10	3B	Main hoist limits and two block operated	Hook close to boom head. It should operate with hook 3M (approx.) below boom head sheaves with boom at maximum radius.	Lower hook to reset limit switch.

SEQUENCE	INDICATOR LIGHT	FUNCTION	RESULTING FROM	REMEDIAL ACTION
11	3C	Whip hoist limits and two block operated	Hook close to boom head. It should operate with hook 3M (approx.) below boom head sheaves with boom at maximum radius.	Lower hook to reset limit switch.
12	3D	Limits operated	Boom at minimum radius	Engine shuts down. Cancel inhibit signal to restart engine and luff out boom to reset luff in limit switch.
13	4A	Hoist luff cavitation. Low boost	Pressure below recommended minimal of 7 bar.	Check integrity of hydraulic circuit.
14	4B	Mipeg Overmoment	Load on pressure sensor has reached 110% overturning moment.	Hoist and spragg brakes are automatically released to enable rope to pay out. Brakes can be applied when the overload is removed, at the driver's discretion, by means of the manual reset button on port console.
15	4C	Hoist luff Slack rope	Hoist stopping lowering motion when driving an empty hook too fast. This will occur mainly with hook near highest point. Luff Paying out too much rope when stowing boom.	Return control to neutral. Do not restart before checking correct laying of rope on drum. Reset by reversing motion.
16	Spare			

Switch off all lights which are not required.

Shut all doors securely.

If dark, ensure that the aviation warning lights are switched on and functioning.

Inform the maintenance supervisor or the responsible person of any discrepancies or low levels in the fuel tank, oil tank etc.

(iii) The operator to report to the supervisor at end of shift that has completed crane operations and has left the crane on a stable and safe condition, or handed over duties to another named and approved operator.

2.8 BATTERY BACKUP SYSTEM (U.P.S.)

Please refer volume 1, section 3a (xxvii)

2.9 SAFE LOAD INDICATOR SYSTEM (MIPEG)

Please refer volume 1, section 3a (xvi)

2.10 DIESEL ENGINE CONTROL SYSTEM

Please refer volume 3, diesel engine specific (note at Petrobras request volume 3 is supplied with only two of the four manual sets for each crane).

2.11 CRANE SHUT DOWN

(i) The crane can be shut down between operations after a cooling down period, by switching to the 'Engine Off' position on the switch on the port control panel. However, it must be taken into consideration that the crane might need a warming up period again, especially when freezing conditions exist.

To avoid this, the engine can be left running at idle speed (1000 r.p.m.). This is achieved by throttling fully back into neutral position. Fuel availability will be limiting factor in the time the engine may run at idle speed.

NOTE: It is important that the driver should never leave the cab while the engine is running.

WARNING: Never shut down the crane with the boom at the minimum radius, as the boom must be slightly luffed in to release the luff ratchet.

(ii) At the end of an operating shift, shut down as follows:

Luff the boom into the stowed position, overriding the luff out limits.

Switch off all equipment, heaters, wipers etc.

The engine and hydraulic components should have a cooling down period of at least two minutes with the engine at idle speed.

The engine load capacity selection is left set to maximum load, failure to do this can render the crane unsafe.

Switch off the engine.

Take the time to check components in the cab and machinery house before leaving.

Remove all personal belongings from the cab.

MIPEG 500

Operating & Maintenance Manual

Clarke Chapman Ltd.
MARINE PEDESTAL CRANE

Petrobras-Vidal de Negreiros

This Document is the property of Datainstrument A.S.
It must not be traced, copied or exhibited to any third party without permission in writing.

SECTION 2

GENERAL DESCRIPTION

The MIPEG 500 crane load indicator system comprises sensors fitted to the crane, a computer cabinet and a display and console unit located in the crane cabin. Figure 2.1 shows a block diagram of the MIPEG 500 system.

The load sensors provide frequency modulated electrical signals which are proportional to the developed loads in the load hoist rope and load moment in the boom hoist systems of the crane. An inclinometer provides boom angle information which is used for calculation of the hook operating radius.

In operation the actual load lifted by the crane is automatically compared with corresponding data related to the maximum permissible crane loading. The permissible and actual loads, together with the actual, expressed as a percentage of permissible are displayed. If this percentage exceeds a preset value, alarms and safety functions are activated.

The computer stores the required load-radius curves. These fixed crane parameters are stored in the main computer's memory while the calibration of the crane is performed by using a known load and boom angle, or known calibration factors, and this information is tabulated into the main computer memory via pushbuttons on the Console Unit.

MIPEG 500 in standard version comprises the following main parts:

- Computer Cabinet (6.1)
- Driver's Display and Console Unit (6.2)
- Sensors (load, moment, boom angle) (6.3)

A technical description of these main parts is given in Section 6. The numbers in parenthesis are references to paragraphs for these descriptions.

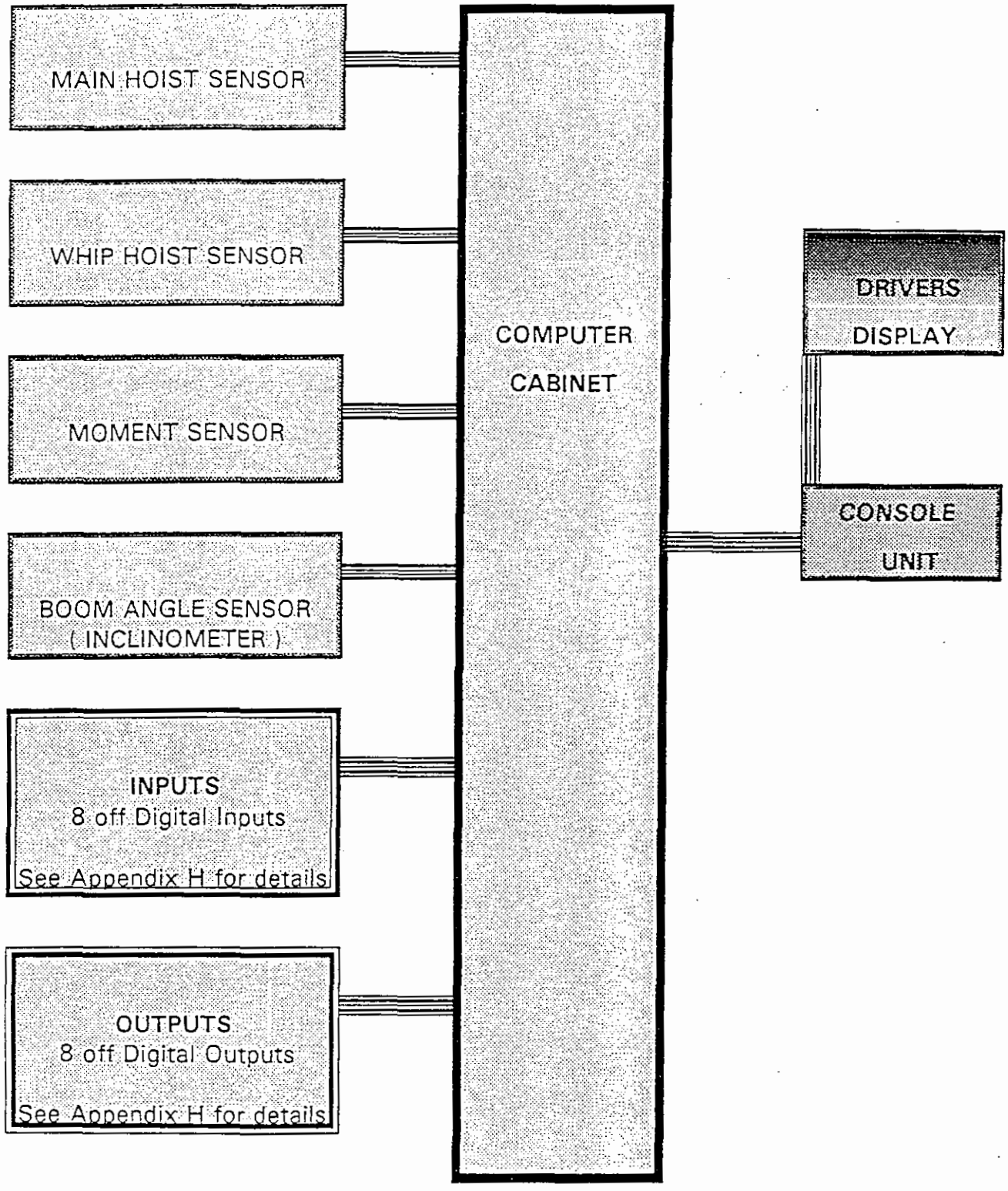

Figure 2.1: MIPEG 500 System Configuration

SECTION 3

OPERATING INSTRUCTIONS FOR CRANE DRIVER.

3.1 Brief Description of MIPEG 500 Operation

MIPEG 500 is a computerized crane safety system. It measures load, moment and radius and indicates safe or hazardous conditions.

It has three main parts; the computer cabinet, the driver's display unit and console unit and the sensors. The driver's display and console unit are located in the cranedriver's cabin, and its layout is shown in Figure 3.1.

Visual and audible alarms are given for loads exceeding 85% of the safe working load. The audible alarm in the console unit is also activated if the radius exceeds the set minimum or maximum angle. The buzzer could be reset by pressing the ACK button.

It is recommended MIPEG 500 be constantly powered if possible, even during periods of time when the crane is not in operation. No warm up time for the system is required, but the sensors will need 5-10 minutes after power on to achieve maximum accuracy and stability.

Section 3a (xvi) - Mipeg 500

Supplementary Important Note to Section 3 - Operating Instructions for Crane driver.

The Mipeg unit has four push buttons which are mounted on the drivers console:

i) Alarm Acknowledge
ii) System Test
iii) Auxiliary Display Function
iv) Wave Height Select

These buttons are used for entering the calibration values for the system when the "offline" function is selected.

In normal operations mode the crane operator should press only one button at any time to avoid the instrument going into "programme mode and off-line, when the Mipeg unit will not display the hook load, safe working load or the crane radius.

1.11.97.

3.1.1 Check of Driver's Display and Console Unit function

Before using the crane :

a) Check that the LEDs back lighting the drivers display panel are illuminated to show that MIPEG 500 is powered up.

b) Press TEST button on Drivers Console unit and confirm :

1/ Operation of the analogue display of percentage safe working load by allowing the needle to make at least one complete revolution.

2/ Integrity of the ALARM lamp on DDU - it will light continuously.

3/ Operation of display window digits. Each segment of each window will show a figure eight with decimal points being visible between each digit. If everything is satisfactory proceed with (c) below, otherwise call Maintenance.

4/ Buzzer operates

c) Press the 'AUX' button and confirm that correct number of 'FALLS' is selected.

Select correct number of Falls in Main Line by pressing the 'AUX' and 'ACK' buttons simultaneously.

d) Ensure that correct 'CURVE' is displayed.

If not, select correct crane curve by pressing the WAVE button.

MIPEG 500

Reliable Solution

Safe Load Indicator

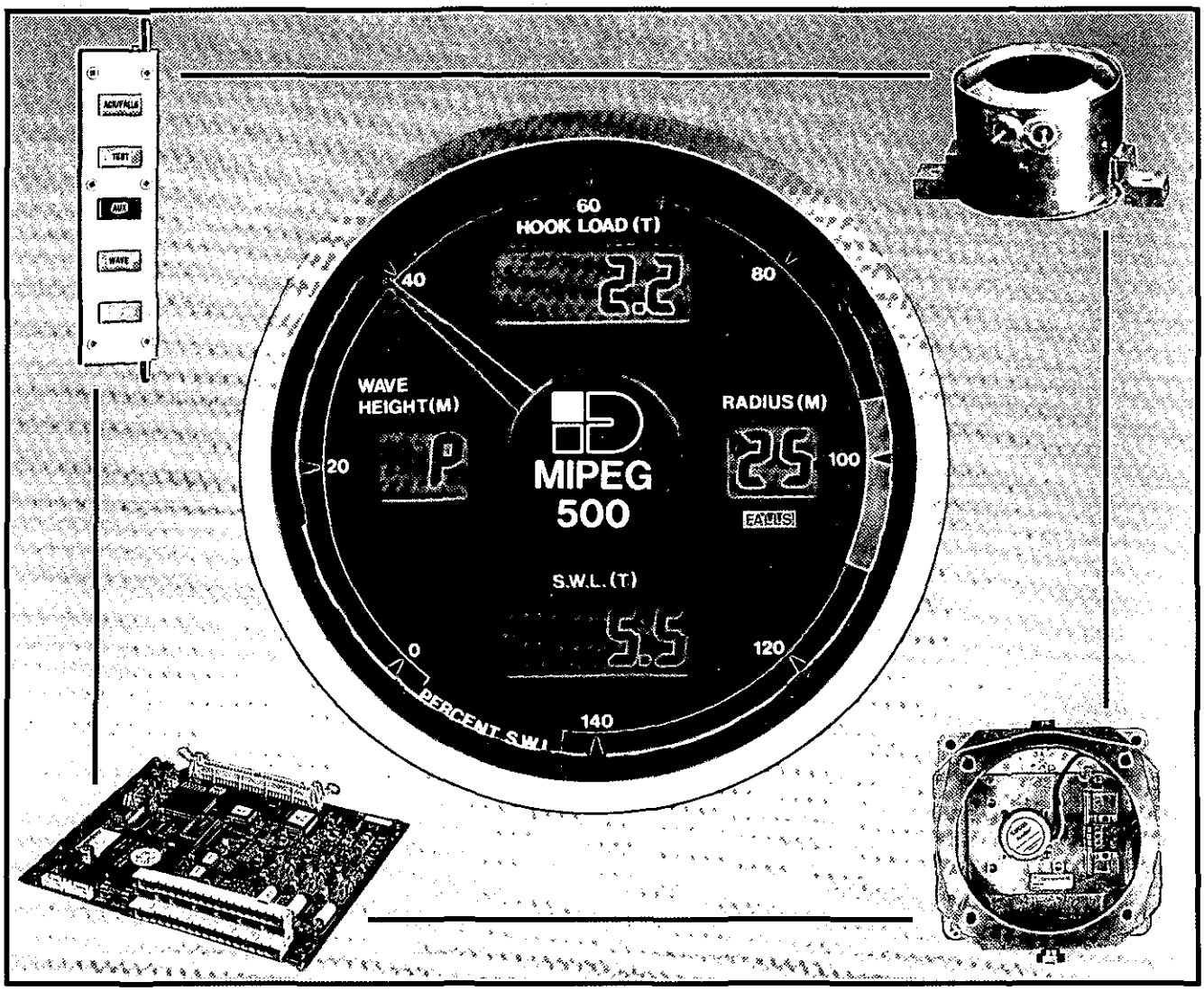

- State of the art indicator to provide crane operators with the required information for safe crane operation
- Conforms to all known Governmental requirements
- Large clear analogue and digital display for ease of viewing
- Sensors certified for zone 1, remainder of system, zone 2 certified
- Sensors using frequency based signal transmission immune to electro magnetic interference and can withstand 10 times overload without failure
- Operating parameters changed by simple panel mounted hermetically sealed push buttons
- Easy adaptable software to handle specific customer requirements
- Designed for high reliability and low maintenance with more than 200 systems now in operation world wide
- Customer specified inputs & outputs to interface with crane control system

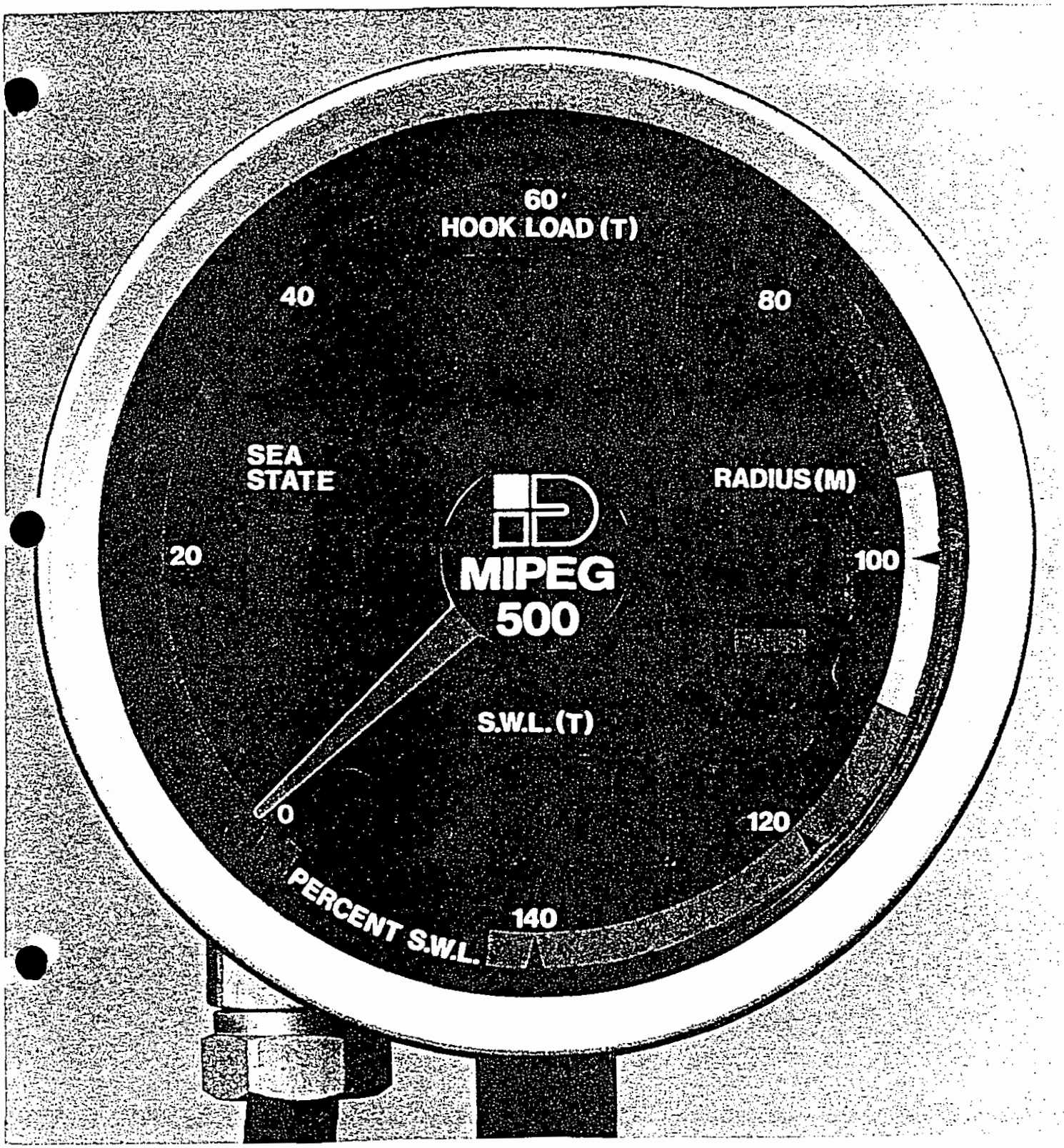

Figure 3.1: MIPEG 500 Driver's Display Unit

3.2 Information Presented on Driver's Display

A. Standard Layout

The standard layout of the driver's display is shown in Figure 3.1

1. The outer circular analogue scale shows percentage safe working load (%SWL).

   The scale is divided into three parts, coloured:
   green - for the range 0 - 95 % SWL,
   yellow - for the range 95 - 110 % SWL, and
   red - for the range > 110 % SWL.

2. The top Window shows the hook load in tons.

   This load will vary slightly as the amount of rope paid out varies. It also varies depending on how the load is lifted; the smoother the lift the less the resultant fluctuation.

3. The left Window displays the crane curve selected. See Appendix H for details

4. The right Window shows the boom operating radius in Meters.

5. The lower Window shows the safe working load in tons which is related to:

   a) the operating configuration of the crane
   b) crane curve selected
   c) radius of operation.

B. Alternative Information

These Windows will also display alternative information when the AUX button on the Console Unit is depressed.

Window	Information presented with AUX button depressed
Upper	Boom angle
Left	Not used
Right	Number of load hoist falls registered in MIPEG, e.g. ' 1 or 4'.
Lower	Not used

C. ALARM

The visual and audible alarms warn of approaching danger.

The ALARM light on Drivers Display will flash and the buzzer in the Console unit will sound when the load raised reaches 85% of SWL at boom radius, crane curve and operating configuration of the crane. This means that although a load may have been lifted at a given radius the alarm may come on as the crane is boomed out beyond that radius and the crane capacity reduces.

To acknowledge an alarm, press the ACK/FALLS button; the ALARM light will remain constantly lit until the overload situation has decreased below the 85% SWL threshold. At this stage the buzzer will be deactivated when the ACK/FALLS button is pressed.

The ALARM light on Drivers Display will flash and the buzzer in the Console unit will sound again when the load raised reaches 110% of SWL. When the ACK/FALLS button is pressed; the ALARM light will remain constantly lit until the overload situation has decreased below the 85% SWL threshold. In this overload situation will the buzzer not be deactivated when the ACK/FALLS button is pressed.

Mipeg 500 will activate the 110% SWL output, when the load reaches 110% SWL and the Overmoment output, when the load reaches 100% of design moment for the crane.

The slack rope outputs will be activated at -0.7 tonnes for whip line and -1.0 tonnes for main line.

The audible alarm in the Console unit will also be activated if the radius exceeds minimum or maximum angle. These angle limits could be set in offline mode. In this situation the buzzer will be deactivated when the ACK/FALLS button is pressed.

3.3 Error Handling

If a detectable error occurs the MIPEG 500 clears the operators display, and blinks an error message 'ERxx' in top window and the alarm light, "xx" is a two digit number identifying the error. Operator should press 'ACK/FALLS' on the Console Unit which then resets MIPEG. If it was a spurious error, satisfactory operation will continue, otherwise call for maintenance.

Section 3d.

Operation and Servicing of Wire Ropes (4 pp)

Contents

Section	Description
1	Handling
2	Installation and Replacement
3	Inspection
4	Maintenance
5	Ropes - General

1. HANDLING

(i) When unreeling or uncoiling wire rope, attention should be given to avoid the introduction of kinks or twists into the wire rope. This type of damage is permanent and places weak spots in the wire rope.

(ii) Mount the suppliers reel on a vertical or horizontal axle and rotate the reel as the wire rope is pulled off. When pulling out of a coil, roll the coil on a clean surface to uncoil the wire rope, thence treat the same as from a reel.

2. INSTALLATION AND REPLACEMENT

a) Installation of Wire Ropes

Mount the wire rope reel on a stand, in line with, and as far as possible away from the drum. The winding of the wire rope onto the drum is of prime importance and as much tension as possible should be applied, particularly on the first layer, to ensure tight and even coiling of the rope. If the first layer is not firmly bedded-in under tension, any subsequent wire rope layers will not coil correctly resulting in severe surface wear or rope distortion. Immediately the new rope is fitted and secured, a light load should be applied and the normal operating cycle run through a number of times at reduced speed. This will enable a new wire rope to gradually adjust itself to the working conditions, allowing the strands to become seated and some of the initial stretch to take place. The rope will then be less liable to become unsettled when the full load is applied.

b) Replacement

(i) When anchoring a new wire rope on the drum ensure that the entire cross section of the rope is held solid, otherwise the inner strands may draw from the attachment and leaving only the outer strands anchored. In such a case, core protrusion will result.

(ii) Always wind the new wire rope on from a reel, winding from the top of a reel to the top of the drum or from the bottom of the reel to the bottom of the drum. Failing to do this will put a reverse bend in the rope and shorten its life.

(iii) The first layer on any drum must be wound on tight and true. Open or wavy winding will cause serious damage to multiple layers. Adjacent turns should be tapped against each other using a wooden mallet, if the drum is not grooved. The whole wire rope should be wound on the drums tightly and correctly. A poor start will mean poor winding and short rope life.

(iv) Never allow wire ropes to become slack, as slackness upsets the coiling on the drum and can allow rope to jump off the drum or guides. If a rope has become slack, check the coiling on the drum before continuing.

WARNING

Any Limits must be reset and checked before recommissioning when new ropes are fitted.

(v) In cases where reeving of ropes is required the ropes must always conform to the supplied reeving Drawing/Diagram. After installation, the rope should be run through its operating cycle several times with a light load and at reduced speed. This allows the new rope to adjust itself gradually to working conditions; the strands to become seated; some stretch to occur and the diameter to reduce slightly as the strands and core are compacted. The wire rope is then less liable to damage when full load is applied.

3. INSPECTION

(i) All running wire ropes in continuous service shall be visually inspected once every working day. A thorough inspection of all wire ropes in use shall be made at least once a month. Any deterioration resulting in appreciable loss of original strength should be carefully noted and determination made as to whether further use of the wire rope would constitute a safety hazard.

(ii) No precise rules can be given to determine the exact time for replacement of wire ropes, since many variable factors are involved. Safety in this respect depends largely on the use of good judgement by an appointed or authorised person. Conditions such as the following should be sufficient reason for questioning rope safety and for consideration of replacement.

1. In running ropes, six randomly distributed broken wires in one rope lay or three broken wires in one strand in one rope lay.

2. Wear of one third the original diameter of outside individual wires.

3. Kinking, crushing, birdcaging or any other damage, resulting in distortion of the rope structure.

4. Evidence of any heat damage from any cause.

5. Any marked reduction in the wire rope diameter.

4. MAINTENANCE

(a) A wire rope is made up of hundreds of wires which move relative to each other when the rope runs over the sheaves. When a rope is manufactured it is completely filled with lubricant, firstly to minimise friction wear and secondly, to keep out moisture with its resulting corrosion.

(b) It is vital that this lubricant be preserved to get the maximum life from the rope. Pressurised lubrication of the rope is required regularly to minimise the escape of the internal lubricant and also reduce friction on the sheaves.

NOTE

Lubricating the rope is as important as greasing any other part of the equipment.

5. ROPES - GENERAL

(a) Point to remember

1. Never overload a rope.

2. Do not shock load the rope. Take up the slack carefully and apply the power smoothly and steadily.

3. Protect all ropes from sharp edges.

4. Avoid dragging ropes from under loads.

5. Avoid rolling loads with ropes.

6. Avoid dropping ropes from heights.

7. Keep ropes clear of areas where any shotblasting is in progress.

Never use a wire rope that has been cut, kinked or crushed.

(b) Prevent loops in slack lines from being pulled tight and kinking. A weak spot will always remain no matter how well the kink seems to have straightened out. If a loop forms do not pull it out, unfold it. Avoid reverse bends.

(c) Never wind more than the proper amount of wire rope on any drum. Ensure all wire rope ends are properly seized and that the ropes do not bind in any sheaves.

(d) Watch for local wear. Premature wear at one spot is common. Maintain the equipment over which the wire rope runs. Worn grooves, poor alignment of sheaves and worn bearings can result in shock loads and excessive vibration.

THIRD ANGLE PROJECTION USED ON THIS DRAWING UNLESS NOTED OTHERWISE BY ARROWS

DO NOT SCALE - IF IN DOUBT ASK

THIS DRAWING IS THE PROPERTY OF CLARKE CHAPMAN LTD. AND IS DISCLOSED ON THE UNDERSTANDING THAT IT IS KEPT STRICTLY CONFIDENTIAL. IT MUST NOT BE COPIED OR OTHERWISE DISCLOSED WITHOUT PRIOR WRITTEN CONSENT OF CLARKE CHAPMAN LTD.

REF No	DESCRIPTION	TYPE OF LUBRICATION	QUANTITY
		50 HOURS	
1	JIB FOOT PINS	SHELL ALVAIA E.P.2	2 NIPPLES
2	JIB FOOT	SHELL ALVAIA E.P.2	2 NIPPLES
3	SLEWRING BEARING	SHELL ALVAIA E.P.2	27 NIPPLES
		100 HOURS	
4	JIB HEAD PULLEYS	SHELL ALVAIA E.P.2	11 NIPPLES
5	MAST HEAD PULLEYS	SHELL ALVAIA E.P.2	8 NIPPLES
6	MAIN HOOK PULLEY	SHELL ALVAIA E.P.2	1 NIPPLE
7	MAIN HOOK CROSSHEAD	SHELL ALVAIA E.P.2	1 NIPPLE
8	AUXILIARY HOOK	SHELL ALVAIA E.P.2	1 NIPPLE
9	WIRE ROPES	ENSIS SDC	BRUSH
10	AUX HOIST DRUM BEARING	SHELL ALVAIA E.P.2	1 NIPPLE
11	LUFF DRUM BEARING	SHELL ALVAIA E.P.2	1 NIPPLE
12	MAIN HOIST DRUM BEARING	SHELL ALVAIA E.P.2	1 NIPPLE
		200 HOURS	
13	MAIN HOIST UNIT	OMALA 220	76.5 LITRES
14	AUXILIARY HOIST UNIT	OMALA 220	38.5 LITRES
15	LUFF UNIT	TEGULA 32	22 LITRES
16	SLEW UNITS	OMALA 220	61.7 LITRES
17	SLEWRING TEETH	SHELL GREASE S.8327	BRUSH
		500 HOURS	
18	HINGES, DOORS & HANDLES	OMALA 220	OIL CAN
		EVERY 6 MONTHS	
19	UNIVERSAL SHAFT	SHELL ALVAIA E.P.2	BRUSH
		AS PER MAINTENANCE MANUAL	
20	DIESEL ENGINE	REFER TO DIESEL MANUAL (3412C)	
		EVERY 12 MONTHS	
21	SPLITTER BOX	TELUS 68	190 LITRES
		EVERY 12 MONTHS	
22	HYDRAULIC START PUMP	SHELL TELLUS T15	20 LITRES

FAVOR CONSULTAR NO SISTEMA, POIS PODERÁ EXISTIR REVISÕES MAIS ATUALIZADAS.

PURCHASER/PROJECT NAME:	BRASPETRO OIL SERVICES COMPANY BRASOIL FPSO-VIDAL DE NEGREIROS
PURCHASE ORDER/CONTRACT No	P.O. VN. GSU-005A/96
PURCHASE REQUISITION No	RM-3010.31-21200-631-IVI-001
EQUIPMENT ITEM No.	S26002A & S26002B
EQUIPMENT DESIGNATION	DECK CRANES

REV	DESCRIPTION	BY/DATE

TOLERANCE APPLICATION
SURFACE SYMBOLS TO BS.308-ISO/R1302
ALL SPECIAL TOLERANCES SHOWN TO BE ADHERED TO.
SYMBOL 'G' DENOTES LINEAR SIZES TO BE MAINTAINED.
ALL OTHER DIMENSIONS TO BE WITHIN ±0.5mm UNLESS OTHERWISE STATED.

MATERIAL
PATT.No -/-
WEIGHT Kgs
ROUGH
FINISHED

INDUSTRIAL POWER GROUP
CLARKE CHAPMAN MARINE

TITLE
LUBRICATION DIAGRAM

DRAWN	AMB	DATE	18/4/97
CHECKED	HJP	SCALE	-/-

DRAWING No. CR 346-8SHT2
REV 0

A2

THIRD ANGLE PROJECTION USED ON THIS DRAWING UNLESS NOTED OTHERWISE BY ARROWS

DO NOT SCALE - IF IN DOUBT ASK

THIS DRAWING IS THE PROPERTY OF CLARKE CHAPMAN LTD. AND IS DISCLOSED ON THE UNDERSTANDING THAT IT IS TO BE KEPT STRICTLY CONFIDENTIAL. IT MUST NOT BE COPIED OR OTHERWISE USED WITHOUT PRIOR WRITTEN CONSENT OF CLARKE CHAPMAN LTD.

REF No	DESCRIPTION	TYPE OF LUBRICATION	QUANTITY
	50 HOURS		
1	JIB FOOT PINS	SHELL ALVAIA E.P.2	2 NIPPLES
2	JIB FOOT	SHELL ALVAIA E.P.2	2 NIPPLES
3	SLEWRING BEARING	SHELL ALVAIA E.P.2	27 NIPPLES
	100 HOURS		
4	JIB HEAD PULLEYS	SHELL ALVAIA E.P.2	8 NIPPLES
5	MAST HEAD PULLEYS	SHELL ALVAIA E.P.2	7 NIPPLES
6	MAIN HOOK PULLEY	SHELL ALVAIA E.P.2	1 NIPPLE
7	MAIN HOOK CROSSHEAD	SHELL ALVAIA E.P.2	1 NIPPLE
8			
9	WIRE ROPES	ENSIS SDC	BRUSH
10			
11	LUFF DRUM BEARING	SHELL ALVAIA E.P.2	1 NIPPLE
12	MAIN HOIST DRUM BEARING	SHELL ALVAIA E.P.2	1 NIPPLE
	200 HOURS		
13	MAIN HOIST UNIT	OMALA 220	16.5 LITRES
14			
15	LUFF UNIT	TEGULA 32	22 LITRES
16	SLEW UNITS	OMALA 220	61.7 LITRES
17	SLEWRING TEETH	SHELL GREASE S.8327	BRUSH
	500 HOURS		
18	HINGES, DOORS & HANDLES	OMALA 220	OIL CAN
	EVERY 6 MONTHS		
19	UNIVERSAL SHAFT	SHELL ALVAIA E.P.2	BRUSH
	AS PER MAINTENANCE MANUAL		
20	DIESEL ENGINE	REFER TO DIESEL MANUAL (3412C)	
	EVERY 12 MONTHS		
21	SPLITTER BOX	TELUS 68	190 LITRES
	EVERY 12 MONTHS		
22	HYDRAULIC START PUMP	SHELL TELLUS T15	20 LITRES

PURCHASER/PROJECT NAME:	BRASPETRO OIL SERVICES COMPANY BRASOIL FPSO-VIDAL DE NEGREIROS
PURCHASE ORDER/CONTRACT No	P.O. VN. GSU-005A/96
PURCHASE REQUISITION No	RM-3010.31-21200-631-IVI-001
EQUIPMENT ITEM No.	526003
EQUIPMENT DESIGNATION	DECK CRANES

REV	DESCRIPTION	BY/DATE

TOLERANCE APPLICATION
SURFACE SYMBOLS TO BS.308-ISO/R1302
ALL SPECIAL TOLERANCES SHOWN TO BE ADHERED TO.
SYMBOL 'G' DENOTES LINEAR SIZES TO BE MAINTAINED.
ALL OTHER DIMENSIONS TO BE WITHIN ±0.5mm UNLESS OTHERWISE STATED.

MATERIAL

PART No

WEIGHT Kgs

ROUGH

FINISHED

INDUSTRIAL POWER GROUP
CLARKE CHAPMAN MARINE

TITLE
LUBRICATION DIAGRAM

DRAWN	AMB	DATE	18/4/97	DRAWING No.	REV
CHECKED	HJP	SCALE		CR 347-85HT2	0

A2

DO NOT SCALE - IF IN DOUBT ASK

THIS DRAWING IS THE PROPERTY OF CLARKE CHAPMAN LTD. AND IS SUBMITTED ON THE UNDERSTANDING THAT IT IS TO BE KEPT STRICTLY CONFIDENTIAL. IT IS NOT TO BE COPIED OR REPRODUCED WITHOUT PRIOR WRITTEN CONSENT OF CLARKE CHAPMAN LTD.

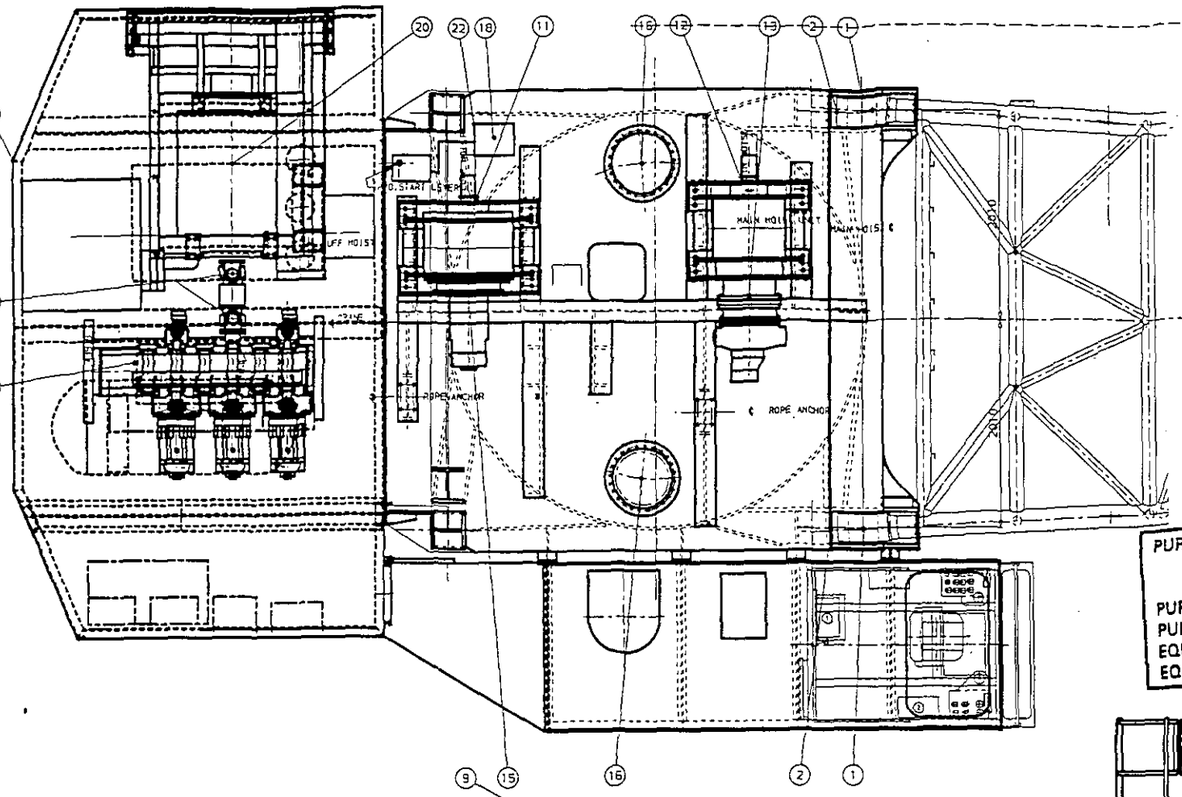

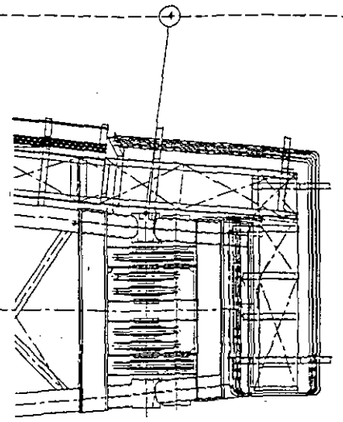

JIB HEAD

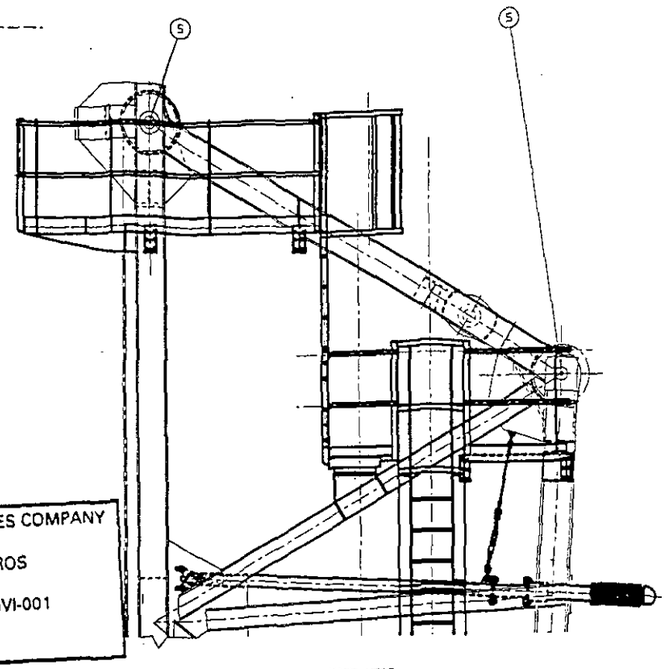

MAST HEAD

PURCHASER/PROJECT NAME:	BRASPETRO OIL SERVICES COMPANY BRASOIL FPSO-VIDAL DE NEGREIROS
PURCHASE ORDER/CONTRACT No	P.O. VN. GSU-005A/96
PURCHASE REQUISITION No	RM-3010.31-21200-631-IVI-001
EQUIPMENT ITEM No.	526003
EQUIPMENT DESIGNATION	DECK CRANES

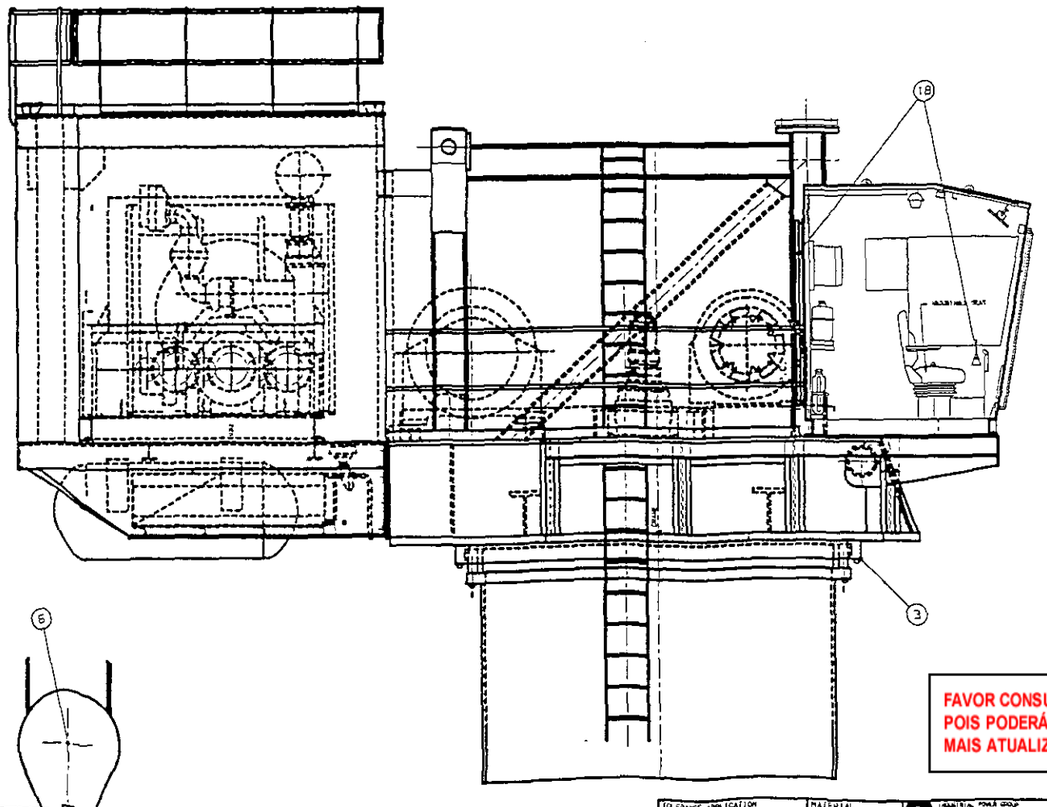

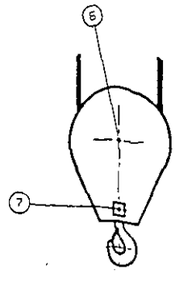

FAVOR CONSULTAR NO SISTEMA, POIS PODERÁ EXISTIR REVISÕES MAIS ATUALIZADAS.

REV	DESCRIPTION	BY/DATE

TOLERANCE APPLICATION
SURFACE SYMBOLS TO BS.308-1972/1302
ALL SPECIAL TOLERANCES SHOWN TO BE ADHERED TO.
SYMBOL 'O' DENOTES LINEAR SIZES TO BE MAINTAINED.
ALL OTHER DIMENSIONS TO BE WITHIN ±0.5mm UNLESS OTHERWISE STATED.

MATERIAL	----------
PATT. NO	/-
WEIGHT Kgs	
ROUGH	---
FINISHED	---

INDUSTRIAL POWER GROUP
CLARKE CHAPMAN MARINE

TITLE: LUBRICATION DIAGRAM

DRAWN	AMB	DATE	18/4/97	DRAWING NO. CR347-8SHT1
CHECKED	HJP	SCALE	---	REV 0

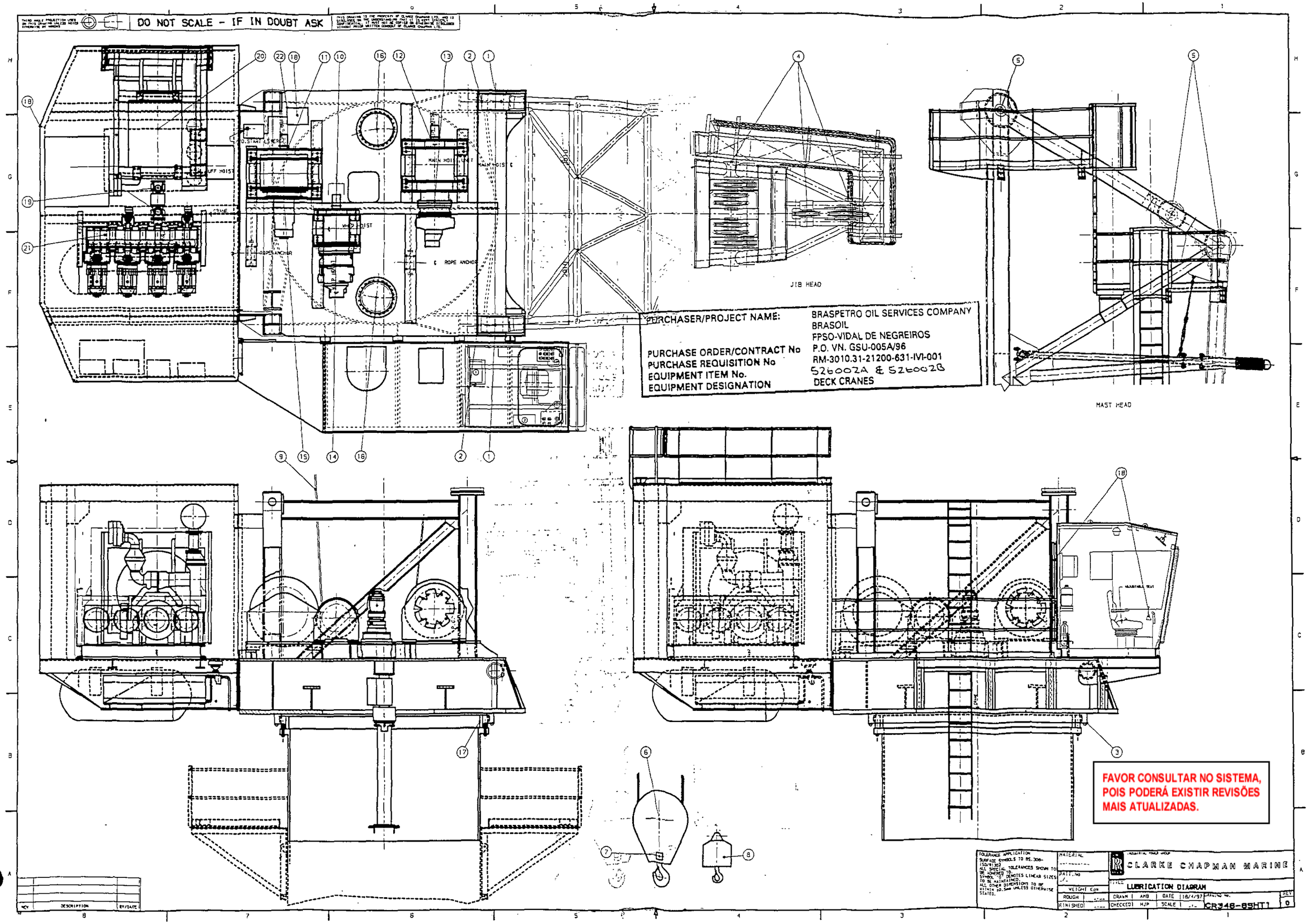
DO NOT SCALE - IF IN DOUBT ASK
JIB HEAD
MAST HEAD
PURCHASER/PROJECT NAME: BRASPETRO OIL SERVICES COMPANY
BRASOIL
FPSO-VIDAL DE NEGREIROS
PURCHASE ORDER/CONTRACT No P.O. VN. GSU-005A/96
PURCHASE REQUISITION No RM-3010.31-21200-631-IVI-001
EQUIPMENT ITEM No. 526002A & 526002B
EQUIPMENT DESIGNATION DECK CRANES
FAVOR CONSULTAR NO SISTEMA, POIS PODERÁ EXISTIR REVISÕES MAIS ATUALIZADAS.
CLARKE CHAPMAN MARINE
LUBRICATION DIAGRAM
CR346-85HT1

THIRD ANGLE PROJECTION USED ON THIS DRAWING UNLESS NOTED OTHERWISE BY ARROWS

DO NOT SCALE - IF IN DOUBT ASK

THIS DRAWING IS THE PROPERTY OF CLARKE CHAPMAN LTD. AND IS DISCLOSED ON THE UNDERSTANDING THAT IT IS KEPT STRICTLY CONFIDENTIAL. IT MUST NOT BE COPIED OR OTHERWISE DISCLOSED WITHOUT PRIOR WRITTEN CONSENT OF CLARKE CHAPMAN LTD.

SCALE 1:2

SECTION ON 'AA'
SCALE 1:20

BOOM FOOT WALKWAY BOTTOM STANCHION

WALKWAY HANDRAIL ASSY
SCALE 1:5

BOOM HEAD WALKWAY TOP STANCHION

WALKWAY SECTION BOTTOM STANCHION

TYPICAL WALKWAY SAFETY ROPE ASSY
SCALE 1:5

WALKWAY SECTION TOP STANCHION

TYPICAL VIEW ON 'A'
SCALE 1:5

TYPICAL VIEW 'B'
SCALE 1:5

SECTION 'GG'
SCALE 1:20

SECTION ON 'EE'
TYPICAL SECTION THRO' RUBBING STRIP
SCALE 4:10

SECTION 'HH'
SCALE 1:20

BOOM FOOT ANCHOR POINT

BOOM HANDRAIL ASSY
SCALE 1:5

BOOM HEAD ANCHOR POINT

INSTALL WIRE THROUGH CLAMP SUPPORTS ITEM 21

SECTION ON 'FF'
TYPICAL SECTION THRO' RUBBING STRIP
SCALE 4:10

VIEW ON 'D'
SCALE 1:5

FAVOR CONSULTAR NO SISTEMA, POIS PODERÁ EXISTIR REVISÕES MAIS ATUALIZADAS.

REF No.	DESCRIPTION	DRG/IDEN No.	REV	No/SET
1	BOOM FOOT SECTION	97/15/1	E	1
2	BUSH	97/15/40	0	2
3	C'SUNK SCREW	-	-	8
4	GREASE NIPPLE	-	-	2
5	HEX HEAD BOLT	-	-	128
6	FULL NUT	-	-	128
7	WASHER	97/15/6	A	128
8	WARNING PLATE	97/15/61	0	5
9	HEX HEAD SCREW	-	-	20
10	FULL NUT	-	-	20
11	SHAKEPROOF WASHER	-	-	20
12	THRUST WASHER	97/15/46-1	1	2
13	THRUST WASHER	97/15/46-2	A	2
14	C'SUNK SCREW	-	-	24
15	BOOM FOOT WALKWAY	97/15/125	A	1
16	GRATINGS (SET)	CRS 5857	-	1
17	HEX HEAD SCREW	-	-	54
18	FULL NUT	-	-	96
19	SHAKEPROOF WASHER	-	-	100
20	HEX HEAD SCREW	-	-	46
21	PIPE CLAMP	-	-	120
22	'U' BOLT	97/15/201	0	20
23	FULL NUT	-	-	80
24	SHAKEPROOF WASHER	-	-	52
25	RIGGING SCREW	-	-	10
26	SAFETY ROPE (BOTTOM)	97-15-256	-	8
27	THIMBLE	-	-	11
28	ROPE CLIP	-	-	12
29	HAND ROPE (BOOM)	97-15-259	-	1
30	BOOM CENTRE SECTION	97/15/76	0	1
31	RUBBING STRIP	97/15/35	0	5
32	RUBBING STRIP	97/15/52	0	1
33	HEX HEAD SCREW	-	-	28
34	FULL NUT	-	-	48
35	FLAT WASHER	-	-	48
36	SHAKEPROOF WASHER	-	-	48
37	BOOM REST	97/15/81	0	1
38	BOOM REST	97/15/85	0	1
39	BOOM CENTRE WALKWAY	97/15/36	C	3
40	GRATINGS (SET)	CRS 5856	-	3
41	BOOM CENTRE SECTION	97/15/12	C	1
42	RUBBING STRIP	97/15/6	0	-
43	BOOM CENTRE SECTION	97/15/56	0	1
44	BOOM REST	97/15/82	0	1
45	BOOM HEAD SECTION	97-15-18	A	1
46	RUBBING STRIP	97/15/38	0	1
47	BOOM HEAD WALKWAY	97/15/174	0	1
48	GRATINGS (SET)	CRS 5843	-	1
49	BOOM HEAD	97/15/182	A	1
50	MOUNTING PLATE	97/15/172	0	1
51	HEX HEAD SCREW	-	-	3
52	FULL NUT	-	-	3
53	SHAKEPROOF WASHER	-	-	3
54	SHACKLE	-	-	2
55	BOOM HEAD WALKWAY	97-15-181	0	1
56	GRATINGS (SET)	CRS 5844	0	1
57	'U' BOLT	-	-	10
58	THIN NUT (RIGHT HAND)	-	-	10
59	THIN NUT (LEFT HAND)	-	-	10
60	1/16" COTTER PIN	-	-	2
61	HAND ROPE (BOTTOM)	97-15-260	-	1
62	HAND ROPE (MIDDLE)	97-15-261	-	1
63	HAND ROPE (TOP)	97-15-262	-	1
64	SAFETY ROPE	97-15-255	-	3
65	SAFETY ROPE	97-15-257	-	1
66	SAFETY ROPE	97-15-258	-	1
67	SAFETY ROPE	97-15-252	-	1
68	BOOM HEAD EXTENSION	97-15-117	C	1
69	BOOM REST	97-15-83	0	1

VIEW 'A'

VIEW 'B'

DETAIL ON ARROW 'J'
SCALE 1:20

PORT SIDE

STB'D SIDE

REV	DESCRIPTION	BY/DATE	REV	DESCRIPTION	BY/DATE
A	FIRST ISSUE				

PURCHASER/PROJECT NAME:	BRASPETRO OIL SERVICES COMPANY BRASOIL FPSO-VIDAL DE NEGREIROS
PURCHASE ORDER/CONTRACT No	P.O. VN. GSU-005A/S6
PURCHASE REQUISITION No	RM-3010.31-21200-631-IVI-001
EQUIPMENT ITEM No.	GD 526 002 B.
EQUIPMENT DESIGNATION	DECK CRANES

TOLERANCE APPLICATION
SURFACE SYMBOLS TO BS.308-ISO/R1302
ALL SPECIAL TOLERANCES SHOWN TO BE ADHERED TO.
SYMBOL '5' DENOTES LINEAR SIZES TO BE MAINTAINED.
ALL OTHER DIMENSIONS TO BE WITHIN ±0.5mm UNLESS OTHERWISE STATED.

MATERIAL: SEE TABLE
PATT.No
WEIGHT kg: ROUGH | FINISHED 24603

INDUSTRIAL POWER GROUP
CLARKE CHAPMAN MARINE

TITLE: AFT CRANE BOOM ASSEMBLY

DRAWN	JPS	DATE	21-11-97
CHECKED		SCALE	1:50

DRAWING No. XCR346-29 REV A

THIRD ANGLE PROJECTION USED ON THIS DRAWING UNLESS NOTED OTHERWISE BY ARROWS

DO NOT SCALE - IF IN DOUBT ASK

THIS DRAWING IS THE PROPERTY OF CLARKE CHAPMAN LTD. AND IS DISCLOSED ON THE UNDERSTANDING THAT IT IS KEPT STRICTLY CONFIDENTIAL. IT MUST NOT BE COPIED OR OTHERWISE DISCLOSED WITHOUT PRIOR WRITTEN CONSENT OF CLARKE CHAPMAN LTD.

REF No.	DESCRIPTION	DRG/IDEN No.	REV	No/SET
1	RUNWAY BEAM	97-15-195	0	1
2	RUNWAY BEAM FRAME	97-15-196	0	1
3	SUPPORT BRACKET	97-15-197	0	2
4	PIN	97-15-198	0	2
5	M42 FLAT WASHER	-	-	4
6	ø4 COTTER PIN	-	-	4
7	M24 HEX HD SCREW	-	-	8
8	M24 FULL NUT	-	-	8
9	M20 HEX HD SCREW	-	-	32
10	M20 FULL NUT	-	-	34
11	STAY	97-15-204	0	2
12	STAY BRACKET	97-15-205	0	2
13	M16 HEX HD SCREW	-	-	4
14	M16 FULL NUT	-	-	4
15	M12 HEX HD SCREW	-	-	4
16	M12 FULL NUT	-	-	4
17	LOCKING PIN	97-15-249	0	2

FAVOR CONSULTAR NO SISTEMA, POIS PODERÁ EXISTIR REVISÕES MAIS ATUALIZADAS.

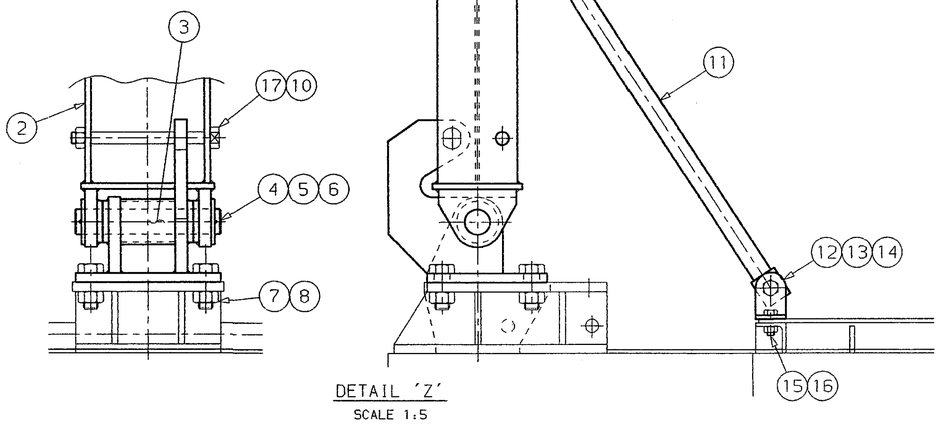

DETAIL 'Z'
SCALE 1:5

THIS END OF RUNWAY BEAM POSITIONED AS SHOWN
TO ALLOW DIESEL ENGINE TO PASS BETWEEN SUPPORT FRAME

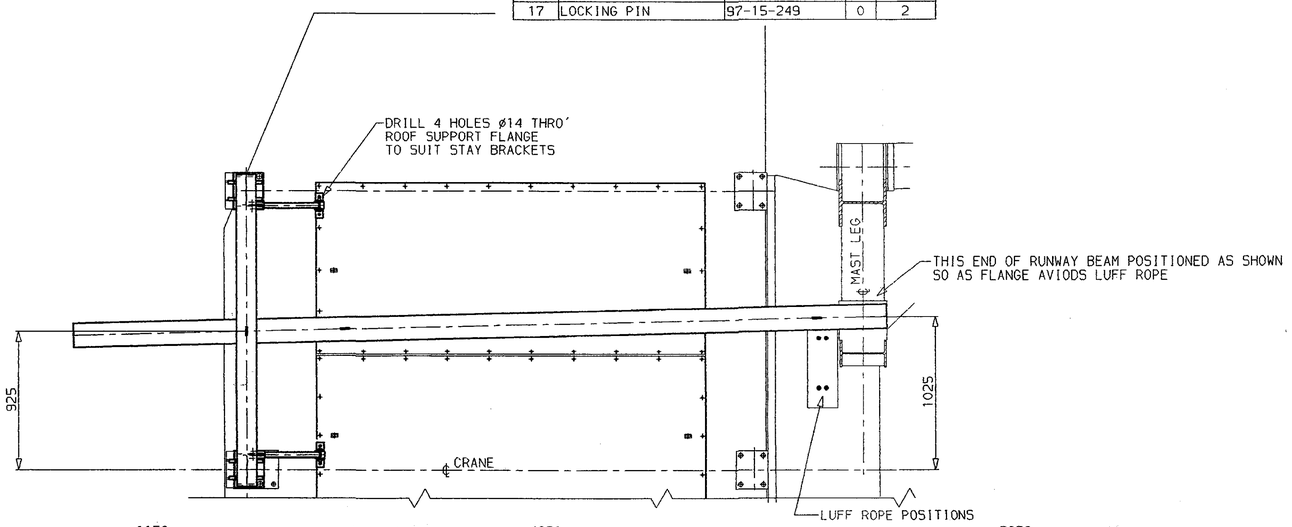

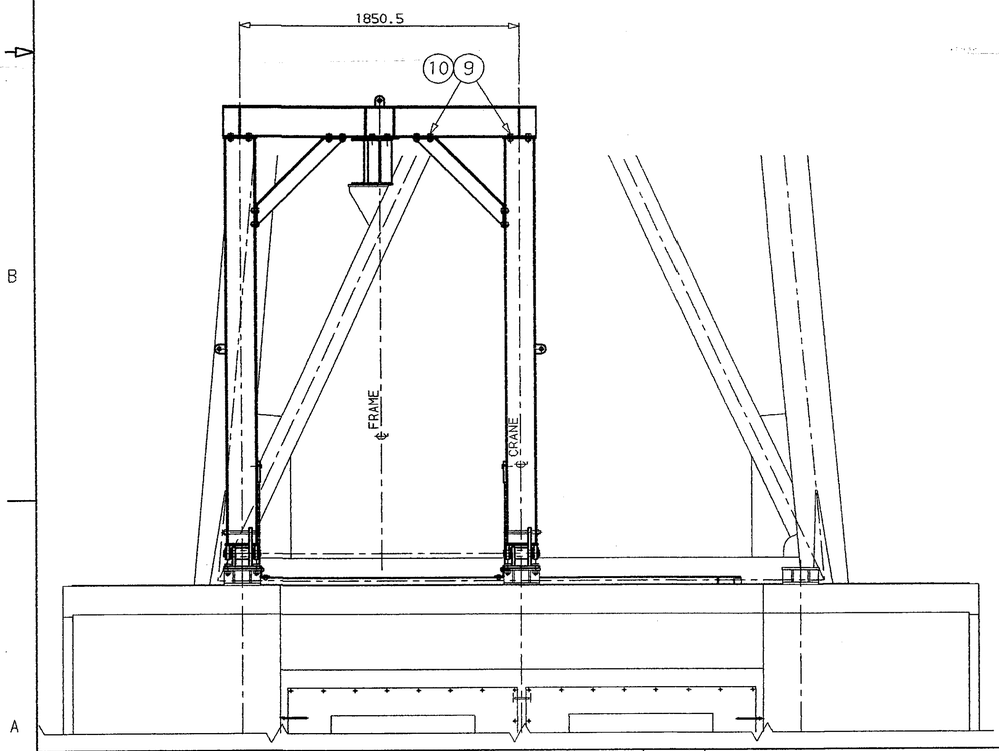

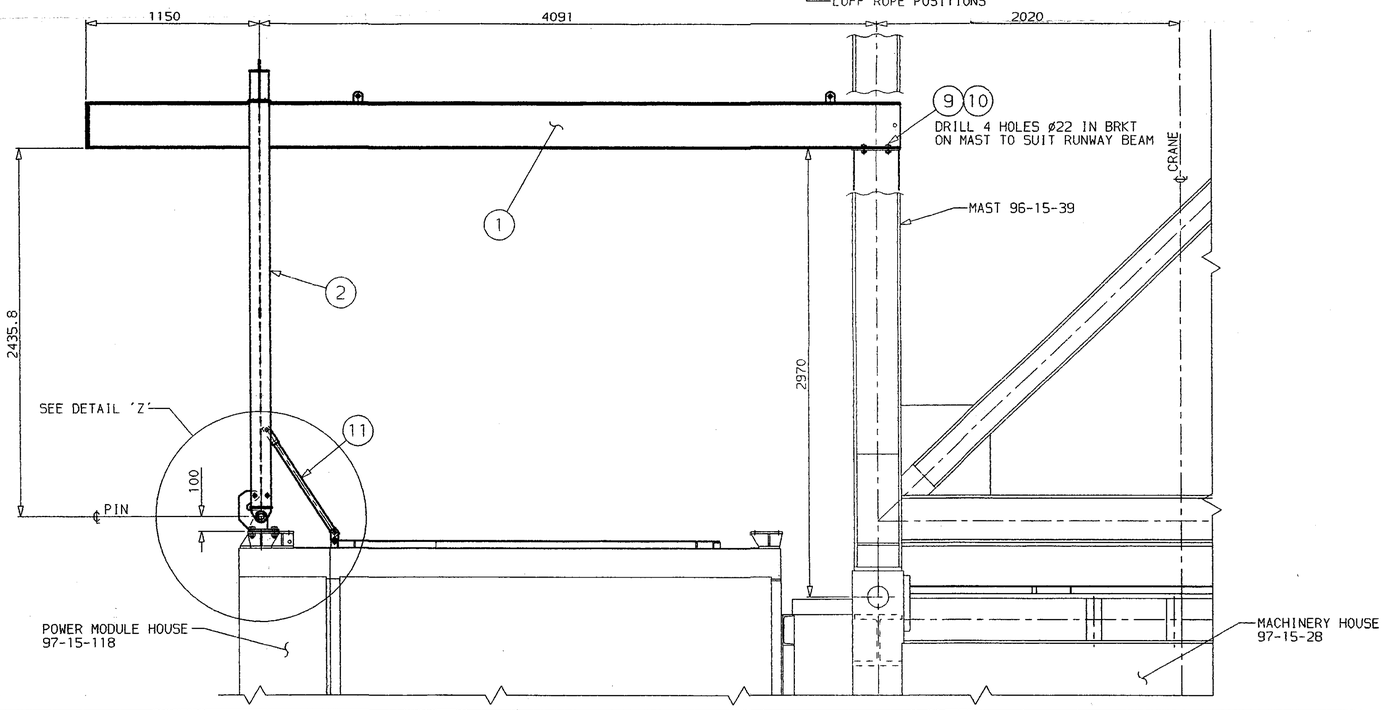

REV	DESCRIPTION	BY/DATE	REV	DESCRIPTION	BY/DATE

PURCHASER/PROJECT NAME:	BRASPETRO OIL SERVICES COMPANY BRASOIL FPSO-VIDAL DE NEGREIROS
PURCHASE ORDER/CONTRACT No	P.O. VN. GSU-005A/96
PURCHASE REQUISITION No	RM-3010.31-21200-631-IVI-001
EQUIPMENT ITEM No.	GD 526 002 A
EQUIPMENT DESIGNATION	DECK CRANES

TOLERANCE APPLICATION
SURFACE SYMBOLS TO BS.308-1990/R1302
ALL SPECIAL TOLERANCES SHOWN TO BE ADHERED TO.
SYMBOL 'G' DENOTES LINEAR SIZES TO BE MAINTAINED.
ALL OTHER DIMENSIONS TO BE WITHIN ±0.5mm UNLESS OTHERWISE STATED.

MATERIAL
PATT.No -/-
WEIGHT Kgs
ROUGH -.---
FINISHED 531

ROLLS-ROYCE INDUSTRIAL POWER GROUP
CLARKE CHAPMAN MARINE

TITLE
RUNWAY BEAM ASSEMBLY

DRAWN	R.P	DATE	14.5.97	DRAWING No. XCR 346-36	REV 0
CHECKED		SCALE	1:20		

A1

THIRD ANGLE PROJECTION USED ON THIS DRAWING UNLESS NOTED OTHERWISE BY ARROWS

DO NOT SCALE - IF IN DOUBT ASK

THIS DRAWING IS THE PROPERTY OF CLARKE CHAPMAN LTD. AND IS DISCLOSED ON THE UNDERSTANDING THAT IT IS KEPT STRICTLY CONFIDENTIAL. IT MUST NOT BE COPIED OR OTHERWISE DISCLOSED WITHOUT PRIOR WRITTEN CONSENT OF CLARKE CHAPMAN LTD.

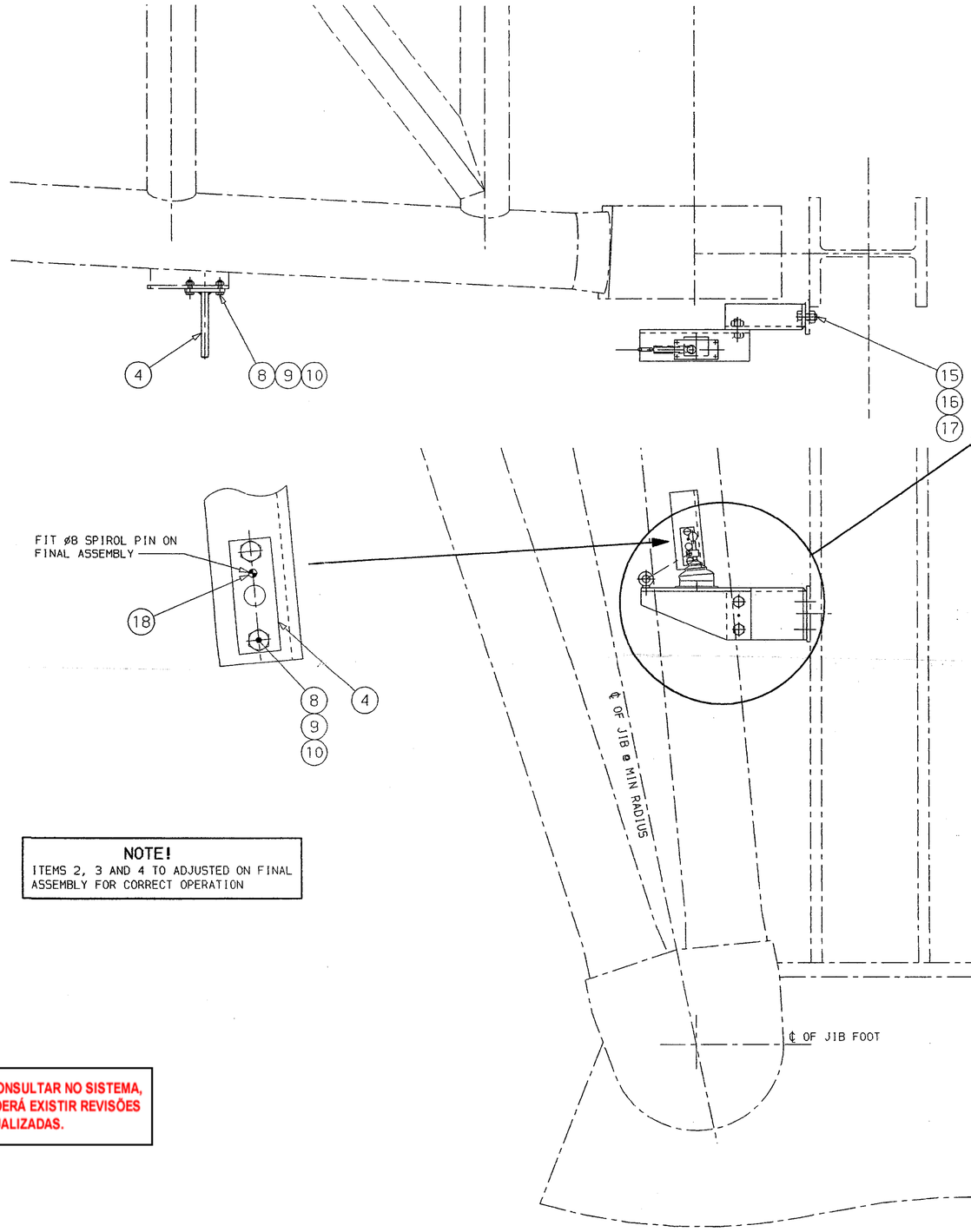

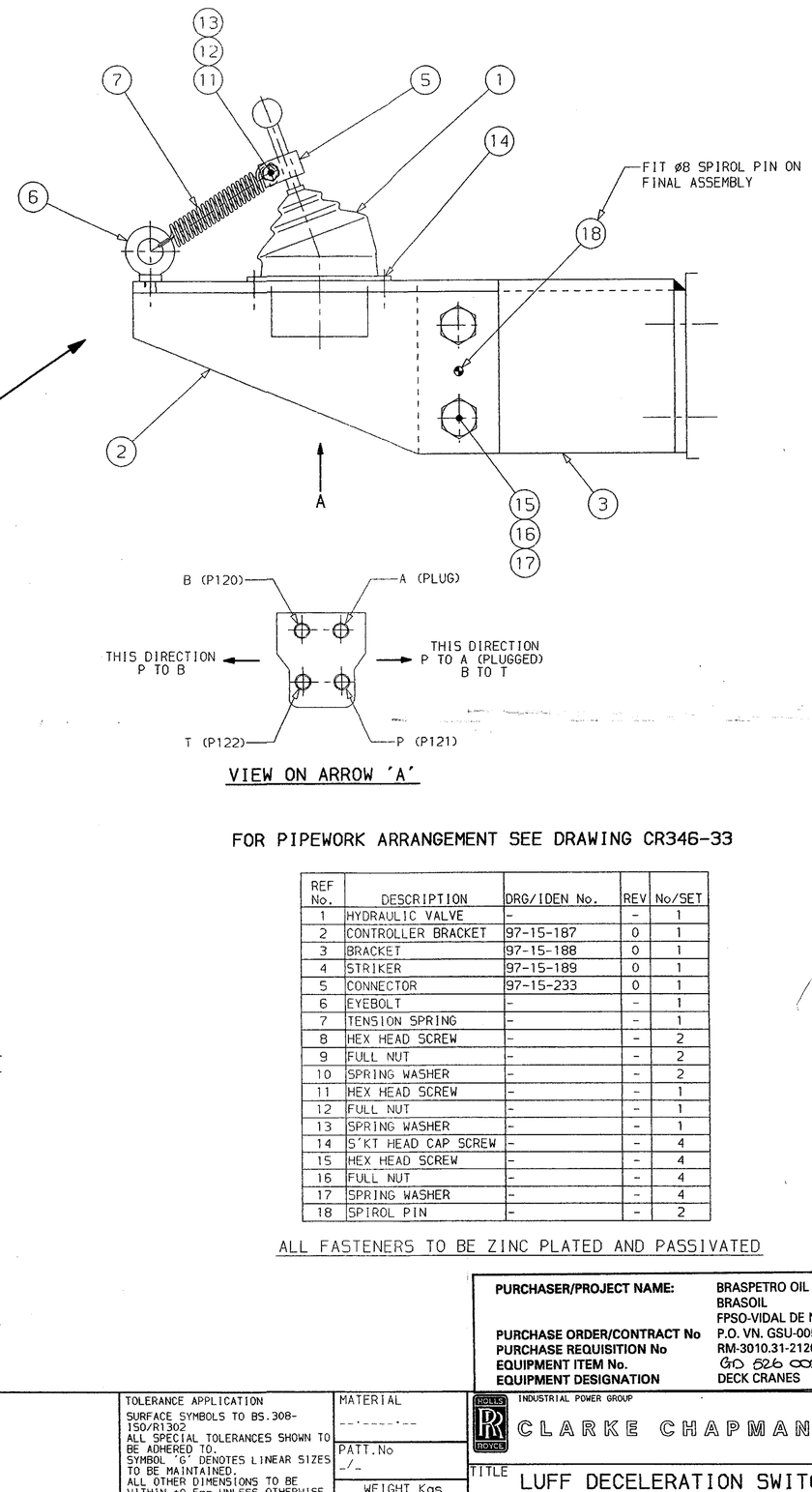

VIEW ON ARROW 'A'

FOR PIPEWORK ARRANGEMENT SEE DRAWING CR346-33

REF No.	DESCRIPTION	DRG/IDEN No.	REV	No/SET
1	HYDRAULIC VALVE	-	-	1
2	CONTROLLER BRACKET	97-15-187	0	1
3	BRACKET	97-15-188	0	1
4	STRIKER	97-15-189	0	1
5	CONNECTOR	97-15-233	0	1
6	EYEBOLT	-	-	1
7	TENSION SPRING	-	-	1
8	HEX HEAD SCREW	-	-	2
9	FULL NUT	-	-	2
10	SPRING WASHER	-	-	2
11	HEX HEAD SCREW	-	-	1
12	FULL NUT	-	-	1
13	SPRING WASHER	-	-	1
14	S'KT HEAD CAP SCREW	-	-	4
15	HEX HEAD SCREW	-	-	4
16	FULL NUT	-	-	4
17	SPRING WASHER	-	-	4
18	SPIROL PIN	-	-	2

ALL FASTENERS TO BE ZINC PLATED AND PASSIVATED

NOTE!
ITEMS 2, 3 AND 4 TO ADJUSTED ON FINAL ASSEMBLY FOR CORRECT OPERATION

FAVOR CONSULTAR NO SISTEMA, POIS PODERÁ EXISTIR REVISÕES MAIS ATUALIZADAS.

PURCHASER/PROJECT NAME:	BRASPETRO OIL SERVICES COMPANY BRASOIL FPSO-VIDAL DE NEGREIROS
PURCHASE ORDER/CONTRACT No	P.O. VN. GSU-005A/96
PURCHASE REQUISITION No	RM-3010.31-21200-631-IVI-001
EQUIPMENT ITEM No.	GD 526 002A
EQUIPMENT DESIGNATION	DECK CRANES

REV	DESCRIPTION	BY/DATE	REV	DESCRIPTION	BY/DATE

TOLERANCE APPLICATION
SURFACE SYMBOLS TO BS.308-ISO/R1302
ALL SPECIAL TOLERANCES SHOWN TO BE ADHERED TO.
SYMBOL 'G' DENOTES LINEAR SIZES TO BE MAINTAINED.
ALL OTHER DIMENSIONS TO BE WITHIN ±0.5mm UNLESS OTHERWISE STATED.

MATERIAL
PATT.No -/-
WEIGHT Kgs
ROUGH -.--
FINISHED -.--

INDUSTRIAL POWER GROUP
CLARKE CHAPMAN MARINE

TITLE LUFF DECELERATION SWITCH ASSEMBLY

DRAWN	MCA	DATE	25-05-97	DRAWING No.	REV
CHECKED		SCALE	NTS	XCR346-35	0

THIRD ANGLE PROJECTION USED ON THIS DRAWING UNLESS NOTED OTHERWISE BY ARROWS

DO NOT SCALE - IF IN DOUBT ASK

THIS DRAWING IS THE PROPERTY OF CLARKE CHAPMAN LTD. AND IS DISCLOSED ON THE UNDERSTANDING THAT IT IS KEPT STRICTLY CONFIDENTIAL. IT MUST NOT BE COPIED OR OTHERWISE DISCLOSED WITHOUT PRIOR WRITTEN CONSENT OF CLARKE CHAPMAN LTD.

SCALE 1:2

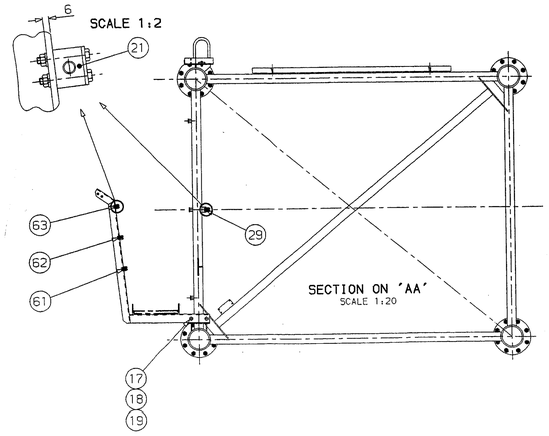

SECTION ON 'AA'
SCALE 1:20

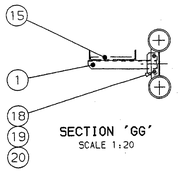

SECTION 'GG'
SCALE 1:20

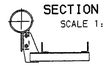

SECTION 'HH'
SCALE 1:20

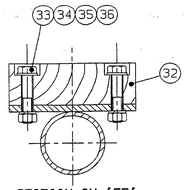

SECTION ON 'EE'
TYPICAL SECTION THRO' RUBBING STRIP
SCALE 4:10

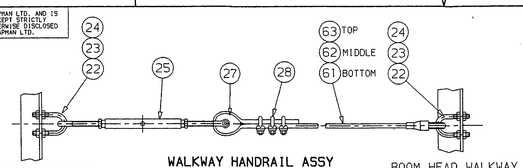

BOOM FOOT WALKWAY BOTTOM STANCHION

WALKWAY HANDRAIL ASSY
SCALE 1:5

BOOM HEAD WALKWAY TOP STANCHION

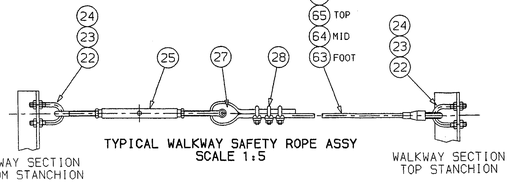

WALKWAY SECTION BOTTOM STANCHION

TYPICAL WALKWAY SAFETY ROPE ASSY
SCALE 1:5

WALKWAY SECTION TOP STANCHION

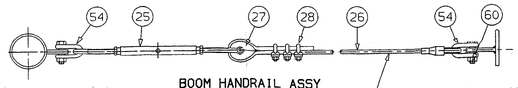

BOOM FOOT ANCHOR POINT

BOOM HANDRAIL ASSY
SCALE 1:5

BOOM HEAD ANCHOR POINT

INSTALL WIRE THROUGH CLAMP SUPPORTS ITEM 21

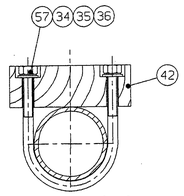

SECTION ON 'FF'
TYPICAL SECTION THRO' RUBBING STRIP
SCALE 4:10

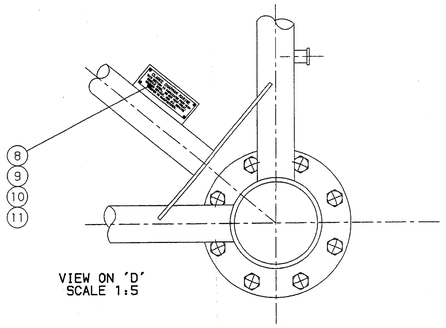

VIEW ON 'D'
SCALE 1:5

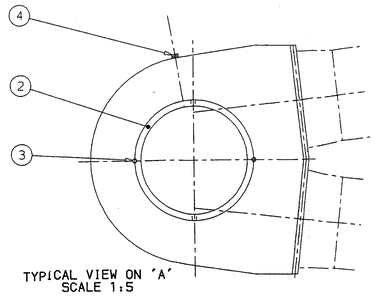

TYPICAL VIEW ON 'A'
SCALE 1:5

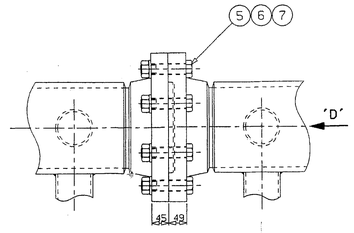

TYPICAL VIEW 'B'
SCALE 1:5

REF No.	DESCRIPTION	DRG/IDEN No.	REV	No/SET
1	BOOM FOOT SECTION	97/15/1	E	1
2	BUSH	97/15/40	0	2
3	C'SUNK SCREW	-	-	8
4	GREASE NIPPLE	-	-	2
5	HEX HEAD BOLT	-	-	128
6	FULL NUT	-	-	128
7	WASHER	97/15/6	A	128
8	WARNING PLATE	97/15/61	0	5
9	HEX HEAD SCREW	-	-	20
10	FULL NUT	-	-	20
11	SHAKEPROOF WASHER	-	-	20
12	THRUST WASHER	97/15/46-1	1	2
13	THRUST WASHER	97/15/46-2	A	2
14	C'SUNK SCREW	-	-	24
15	BOOM FOOT WALKWAY	97/15/125	A	1
16	GRATINGS (SET)	CRS 5857	-	1
17	HEX HEAD SCREW	-	-	54
18	FULL NUT	-	-	98
19	SHAKEPROOF WASHER	-	-	100
20	HEX HEAD SCREW	-	-	46
21	PIPE CLAMP	-	-	120
22	'U' BOLT	97/15/201	0	20
23	FULL NUT	-	-	80
24	SHAKEPROOF WASHER	-	-	52
25	RIGGING SCREW	-	-	10
26	SAFETY ROPE (BOTTOM)	97-15-256	-	8
27	THIMBLE	-	-	11
28	ROPE CLIP	-	-	12
29	HAND ROPE (BOOM)	97-15-259	-	1
30	BOOM CENTRE SECTION	97/15/76	0	1
31	RUBBING STRIP	97/15/35	0	5
32	RUBBING STRIP	97/15/52	0	1
33	HEX HEAD SCREW	-	-	28
34	FULL NUT	-	-	48
35	FLAT WASHER	-	-	48
36	SHAKEPROOF WASHER	-	-	48
37	BOOM REST	97/15/81	0	1
38	BOOM REST	97/15/85	0	1
39	BOOM CENTRE WALKWAY	97/15/36	C	3
40	GRATINGS (SET)	CRS 5856	-	3
41	BOOM CENTRE SECTION	97/15/12	C	1
42	RUBBING STRIP	97/15/6	0	-
43	BOOM CENTRE SECTION	97/15/56	0	1
44	BOOM REST	97/15/82	0	1
45	BOOM HEAD SECTION	97-15-18	A	1
46	RUBBING STRIP	97/15/38	0	1
47	BOOM HEAD WALKWAY	97/15/174	0	1
48	GRATINGS (SET)	CRS 5843	-	1
49	BOOM HEAD	97/15/182	A	1
50	MOUNTING PLATE	97/15/172	0	1
51	HEX HEAD SCREW	-	-	3
52	FULL NUT	-	-	3
53	SHAKEPROOF WASHER	-	-	3
54	SHACKLE	-	-	2
55	BOOM HEAD WALKWAY	97-15-181	0	1
56	GRATINGS (SET)	CRS 5844	0	1
57	'U' BOLT	-	-	10
58	THIN NUT (RIGHT HAND)	-	-	10
59	THIN NUT (LEFT HAND)	-	-	10
60	1/16" COTTER PIN	-	-	2
61	HAND ROPE (BOTTOM)	97-15-260	-	1
62	HAND ROPE (MIDDLE)	97-15-261	-	1
63	HAND ROPE (TOP)	97-15-262	-	1
64	SAFETY ROPE	97-15-255	-	3
65	SAFETY ROPE	97-15-257	-	1
66	SAFETY ROPE	97-15-258	-	1
67	SAFETY ROPE	97-15-252	-	1
68	BOOM HEAD EXTENSION	97-15-117	C	1
69	BOOM REST	97-15-83	0	1

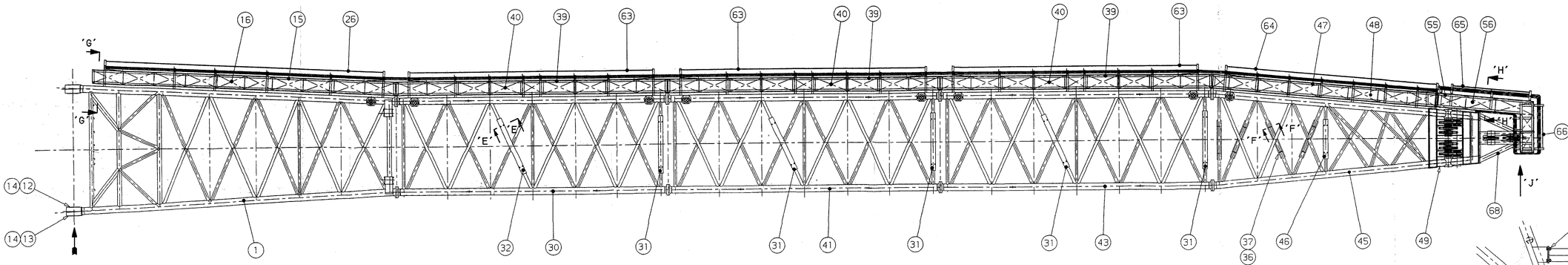

VIEW 'A'

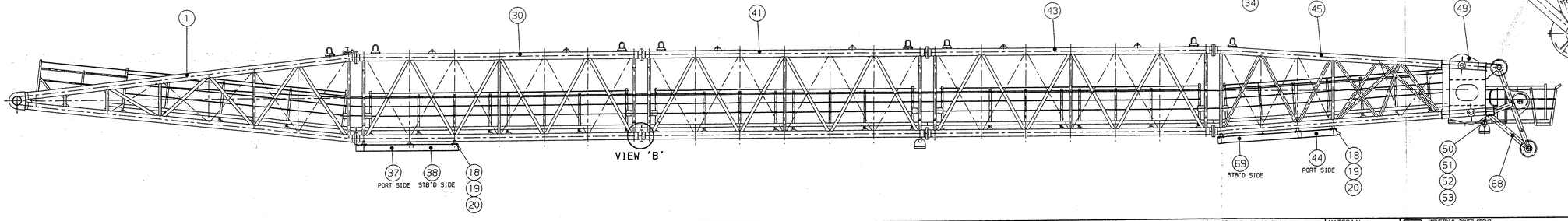

VIEW 'B'

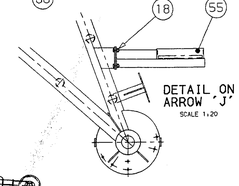

DETAIL ON ARROW 'J'
SCALE 1:20

REV	DESCRIPTION	BY/DATE	REV	DESCRIPTION	BY/DATE
A	FIRST ISSUE				

PURCHASER/PROJECT NAME:	BRASPETRO OIL SERVICES COMPANY BRASOIL FPSO-VIDAL DE NEGREIROS
PURCHASE ORDER/CONTRACT No	P.O. VN. GSU-005A/96
PURCHASE REQUISITION No	RM-3010.31-21200-631-IVI-001
EQUIPMENT ITEM No.	GD 526 002 A
EQUIPMENT DESIGNATION	DECK CRANES

TOLERANCE APPLICATION
SURFACE SYMBOLS TO BS.308-ISO/R1302
ALL SPECIAL TOLERANCES SHOWN TO BE ADHERED TO.
SYMBOL "G" DENOTES LINEAR SIZES TO BE MAINTAINED.
ALL OTHER DIMENSIONS TO BE WITHIN ±0.5mm UNLESS OTHERWISE STATED.

MATERIAL: SEE TABLE
PATT.No
WEIGHT kg: ROUGH | FINISHED 24603

INDUSTRIAL POWER GROUP
CLARKE CHAPMAN MARINE

TITLE: AFT CRANE BOOM ASSEMBLY

DRAWN	JPS	DATE	21-11-97
CHECKED		SCALE	1:50

DRAWING No. XCR346-29 REV A

THIRD ANGLE PROJECTION USED ON THIS DRAWING UNLESS NOTED OTHERWISE BY ARROWS

DO NOT SCALE - IF IN DOUBT ASK

THIS DRAWING IS THE PROPERTY OF CLARKE CHAPMAN LTD. AND IS DISCLOSED ON THE UNDERSTANDING THAT IT IS KEPT STRICTLY CONFIDENTIAL. IT MUST NOT BE COPIED OR OTHERWISE DISCLOSED WITHOUT PRIOR WRITTEN CONSENT OF CLARKE CHAPMAN LTD.

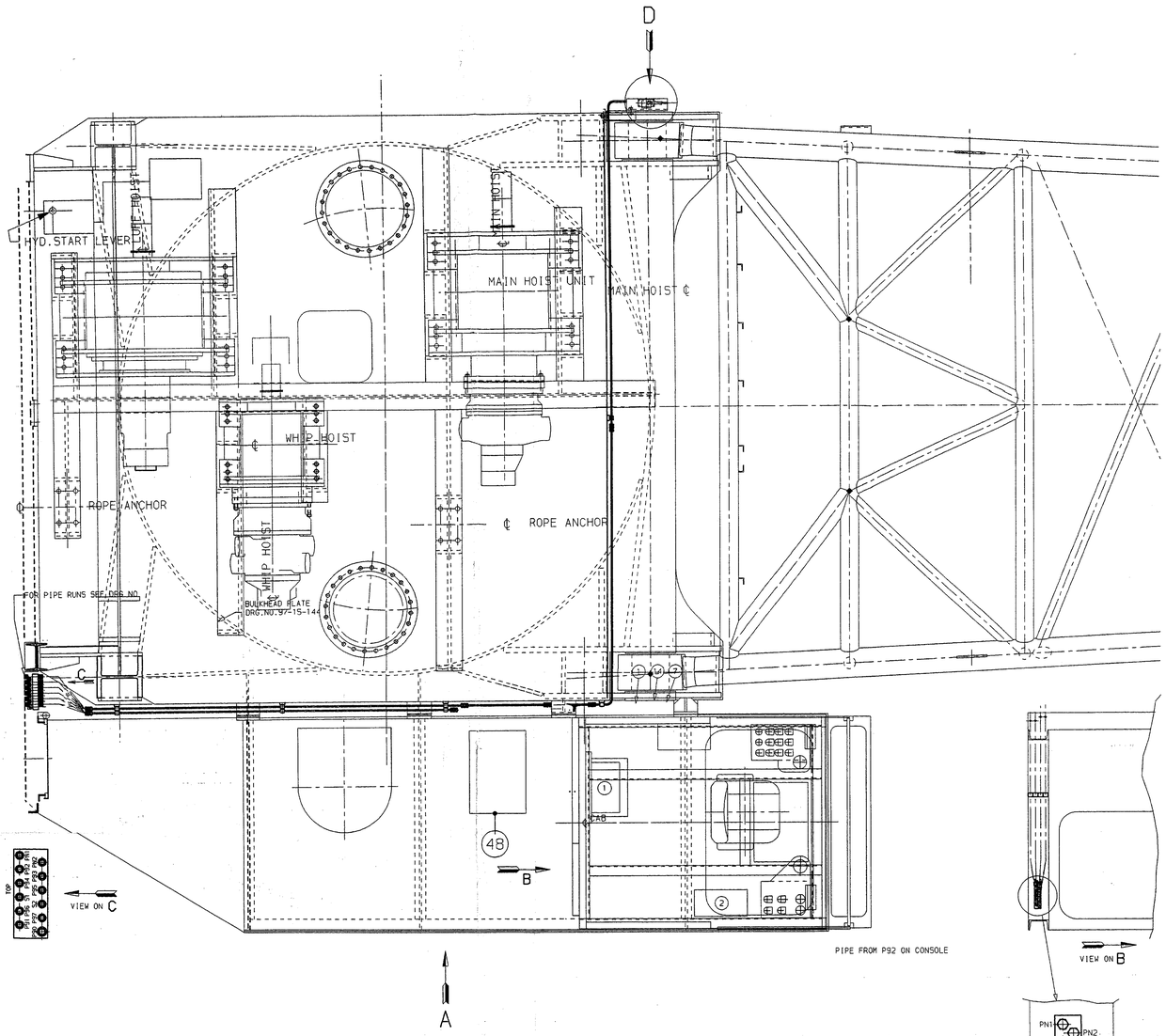

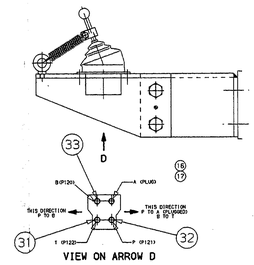

ITEM No.	QTY.	DESCRIPTION	DRG/IDEN NO.	TOTAL WEIGHT KG	REMARKS
1	11	PIPE	BF058	-	ø10mmOD
2	1	PIPE	-	-	ø12mmOD
3	-	MALE MALE ADAPTOR	BF007	-	3/8"x3/8"
4	-	MALE STUD COUPLING	BF057	-	3/8"x10mm
5	-	TEE	BF015	-	10mm
6	-	HOSE ASSEMBLY	-	-	SEE HOSE CHART
7	-	HOSE ASSEMBLY	-	-	SEE HOSE CHART
8	-	HOSE ASSEMBLY	-	-	SEE HOSE CHART
9	-	HOSE ASSEMBLY	-	-	SEE HOSE CHART
10	-	HOSE ASSEMBLY	-	-	SEE HOSE CHART
11	-	HOSE ASSEMBLY	-	-	SEE HOSE CHART
12	-	HOSE ASSEMBLY	-	-	SEE HOSE CHART
13	-	HOSE ASSEMBLY	-	-	SEE HOSE CHART
14	-	HOSE ASSEMBLY	-	-	SEE HOSE CHART
15	-	HOSE ASSEMBLY	-	-	SEE HOSE CHART
16	-	HOSE ASSEMBLY	-	-	SEE HOSE CHART
17	-	HOSE ASSEMBLY	-	-	SEE HOSE CHART
18	-	HOSE ASSEMBLY	-	-	SEE HOSE CHART
19	-	HOSE ASSEMBLY	-	-	SEE HOSE CHART
20	-	HOSE ASSEMBLY	-	-	SEE HOSE CHART
21	-	HOSE ASSEMBLY	-	-	SEE HOSE CHART
22	-	HOSE ASSEMBLY	-	-	SEE HOSE CHART
23	-	HOSE ASSEMBLY	-	-	SEE HOSE CHART
24	-	HOSE ASSEMBLY	-	-	SEE HOSE CHART
25	-	HOSE ASSEMBLY	-	-	SEE HOSE CHART
26	-	HOSE ASSEMBLY	-	-	SEE HOSE CHART
27	-	HOSE ASSEMBLY	-	-	SEE HOSE CHART
28	-	HOSE ASSEMBLY	-	-	SEE HOSE CHART
29	-	HOSE ASSEMBLY	-	-	SEE HOSE CHART
30	-	HOSE ASSEMBLY	-	-	SEE HOSE CHART
31	-	HOSE ASSEMBLY	-	-	SEE HOSE CHART
32	-	HOSE ASSEMBLY	-	-	SEE HOSE CHART
33	-	HOSE ASSEMBLY	-	-	SEE HOSE CHART
-	-				
-	-				
-	-				
-	-				

FAVOR CONSULTAR NO SISTEMA, POIS PODERÁ EXISTIR REVISÕES MAIS ATUALIZADAS.

PURCHASER/PROJECT NAME:	BRASPETRO OIL SERVICES COMPANY BRASOIL FPSO-VIDAL DE NEGREIROS
PURCHASE ORDER/CONTRACT No	P.O. VN. GSU-005A/96
PURCHASE REQUISITION No	RM-3010.31-21200-631-IVI-001
EQUIPMENT ITEM No.	GO 526002.B
EQUIPMENT DESIGNATION	DECK CRANES

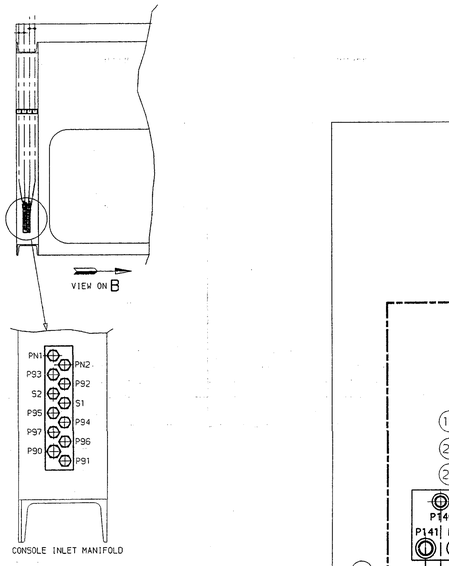

CONTROL PIPE LINE DIAGRAM

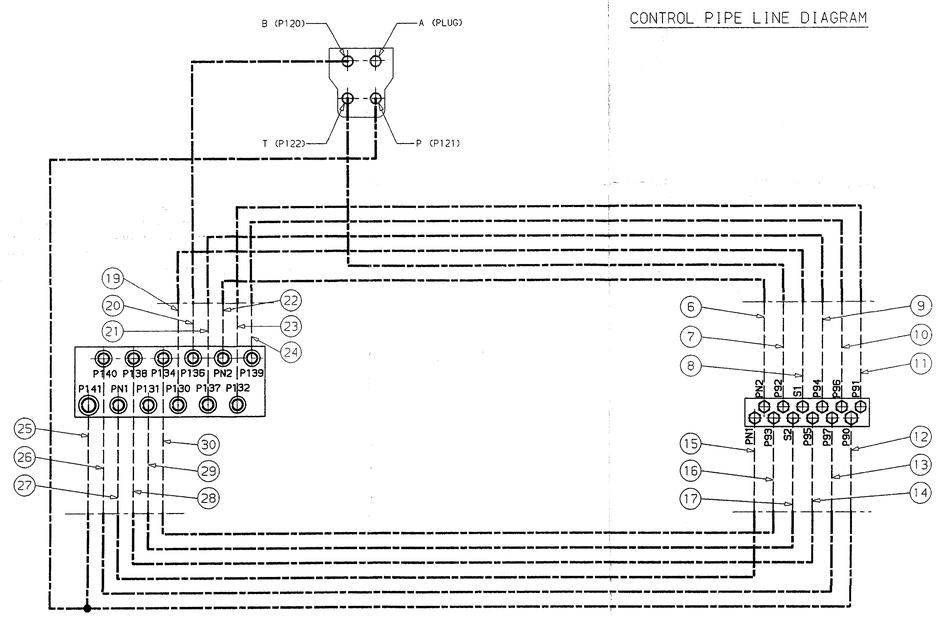

REV	DESCRIPTION	BY/DATE	REV	DESCRIPTION	BY/DATE

TOLERANCE APPLICATION
SURFACE SYMBOLS TO BS.308-ISO/R1302
ALL SPECIAL TOLERANCES SHOWN TO BE ADHERED TO.
SYMBOL "6" DENOTES LINEAR SIZES TO BE MAINTAINED.
ALL OTHER DIMENSIONS TO BE WITHIN ±0.5mm UNLESS OTHERWISE STATED.

MATERIAL --'-----'--
PATT.No -/-
WEIGHT Kgs
ROUGH -.--
FINISHED -.--

INDUSTRIAL POWER GROUP
CLARKE CHAPMAN MARINE

TITLE
CONTROL PIPE ASSEMBLY

DRAWN	MM	DATE	2-10-97	DRAWING No.	REV
CHECKED	LDH	SCALE	1:15	CR346-33	0

THIRD ANGLE PROJECTION USED ON THIS DRAWING UNLESS NOTED OTHERWISE BY ARROWS

DO NOT SCALE - IF IN DOUBT ASK

THIS DRAWING IS THE PROPERTY OF CLARKE CHAPMAN LTD. AND IS DISCLOSED ON THE UNDERSTANDING THAT IT IS KEPT STRICTLY CONFIDENTIAL. IT MUST NOT BE COPIED OR OTHERWISE DISCLOSED WITHOUT PRIOR WRITTEN CONSENT OF CLARKE CHAPMAN LTD.

NOTES:- OIL CAPACITY:-1810 LTRS .
PLATE THICKNESS:-5 M.M.
PLATE MATERIAL:-ST.STL.316L
INSIDE OF RESERVOIR WALLS TO HAVE STRENGTHENING RIBS
DOWNPIPE ON RETURN FILTER MUST BE REMOVED TO
ENABLE FILTER TO BE WITHDRAWN

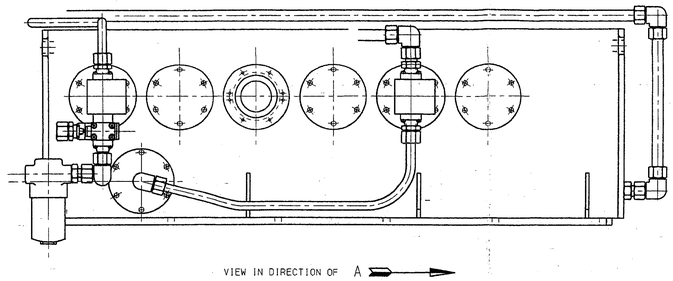

VIEW IN DIRECTION OF A

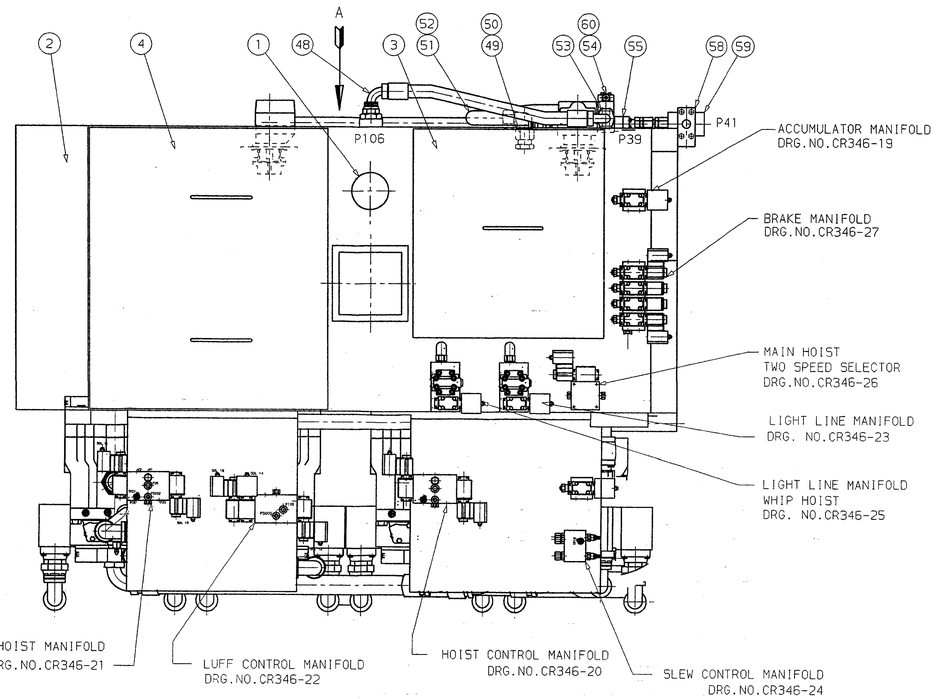

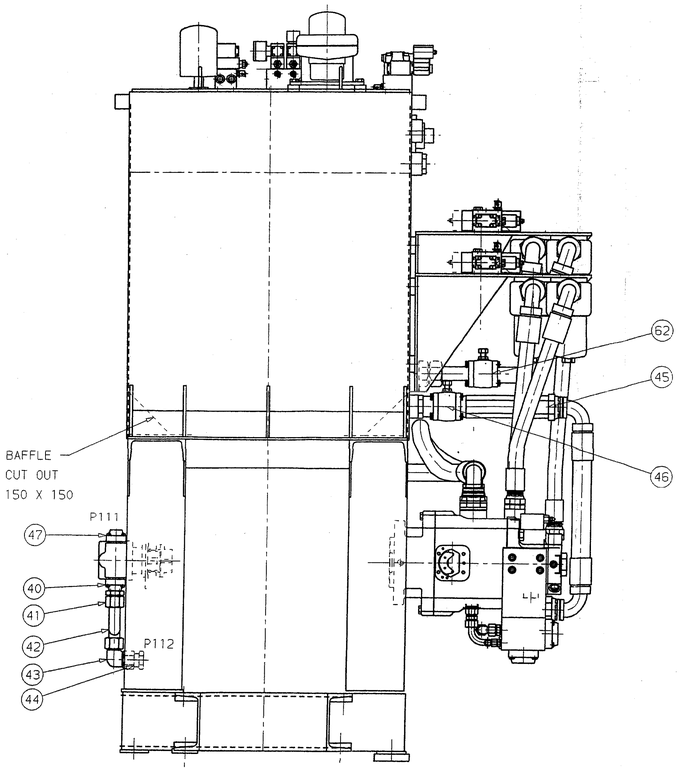

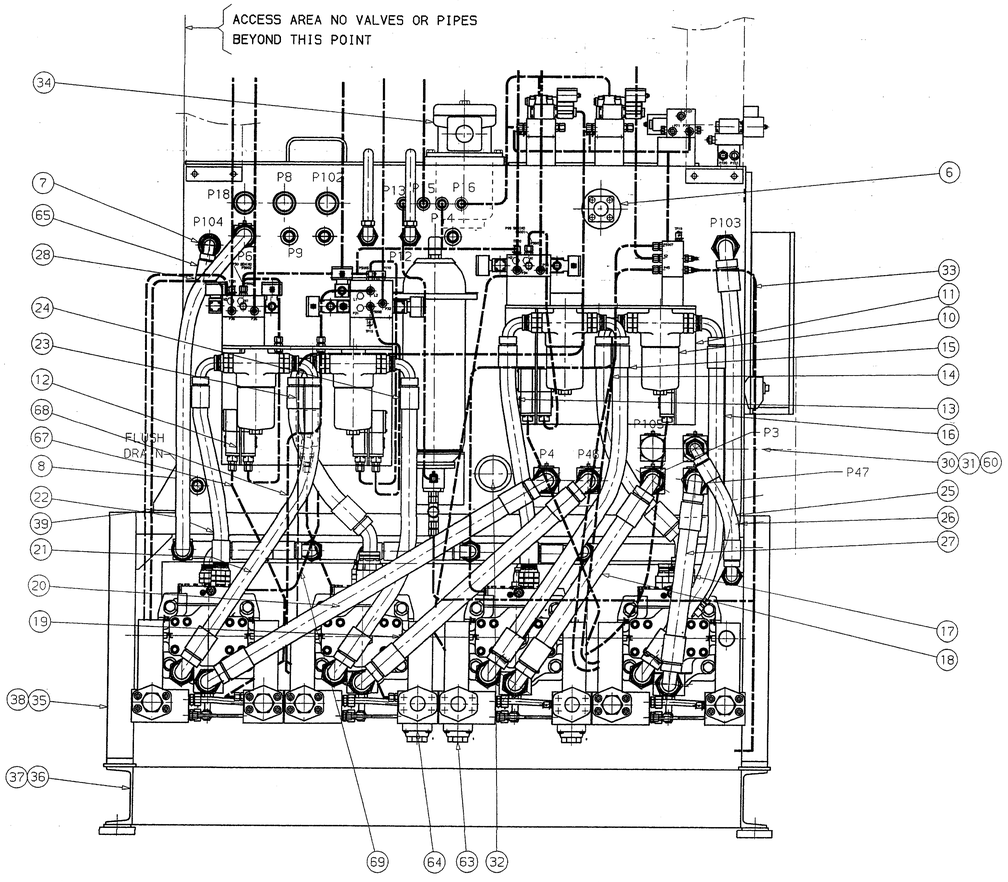

ITEM No.	QTY.	DESCRIPTION	DRG/IDEN NO.	TOTAL WGHT KG	REMARKS
1	1	AIR BREATHER	BLF		
2	1	RESERVOIR	012-02324		
3	1	RESERVOIR COVER	PART OF ITEM 2		
4	1	RESERVOIR COVER	PART OF ITEM 2		
5		COVER BOLTS	M10x30 S.S.		
6	1	LEVEL SWITCH	FS4257/5D/250/S2/BOF/680		
7	1	PLUG	BF062	2"	
8	2	SELF SEALING COUPLING	-		
9	1	THERMOSTAT	4199120322121216O150		
10	4	PRESSURE FILTER	LFBNHC330G10B1.0/BYP		
11	1	FILTER BRACKET	BF063		
12	1	FILTER BRACKET	BF063		
13	1	HOSE ASSEMBLY	1 1/4"90°x5Tx1000LG		
14	1	HOSE ASSEMBLY	1 1/4"45°x90°AT 180øx1050LG		
15	1	HOSE ASSEMBLY	1 1/4"90°x90°AT 180øx1500LG		
16	1	HOSE ASSEMBLY	1 1/4"90°x90°AT 90øx1400LG		
17	1	HOSE ASSEMBLY	2"90°x5Tx1200		
18	1	HOSE ASSEMBLY	2"45°x90°x1280		
19	1	HOSE ASSEMBLY	2"45°x90°x1480		
20	1	HOSE ASSEMBLY	2"90°x45°x1680		
21	1	HOSE ASSEMBLY	1 1/4"90°x90° AT 90°x1250LG		
22	1	HOSE ASSEMBLY	1 1/4"90°x5Tx860LG		
23	1	HOSE ASSEMBLY	1 1/4"90°x5Tx880LG		
24	1	HOSE ASSEMBLY	1 1/4"90°x90°x1240LG		
25	1	HOSE ASSEMBLY	1"90°x90°x530LG		
26	1	HOSE ASSEMBLY	1 1/4"90°x90°x1320LG		
27	1	HOSE ASSEMBLY	1 1/4"90°x90°x620LG		
28	1	HOSE ASSEMBLY	1 1/4"STx5Tx1310LG		
29			-		
30	1	PIPE COUPLING	-		
31	1	STEEL PIPE	-		
32	1	HEATER	FPSLT020 2KW		
33	2	SIGHT GLASS	FSA 257		
34	1	RETURN FILTER	RFBNHC950F10B1.0/BYP		
35	1	RESERVOIR SUPPORT	97-15-116	205	
36	1	GEARBOX BEDPLATE	97-15-104	283	
37		BEDPLATE BOLTS	-		
38	8	SUPPORT BOLTS	-		M24
39	16	RESERVOIR BOLTS	BF065		M16x40
40	1	SAE FLANCE	2"SAE 3000		
41	1	PIPE COUPLING	-		
42	1	PIPE	-		
43	1	ELBOW	25mm EQUAL BF047		
44	1	ADAPTOR	1"MM BF042		
45	4	PIPE EXTENSION	-		
46	5	ISOLATING VALVE	2" 108008		
47		SAE FLANGE	-		
48		HOSE ASSEMBLY	1 1/4"90°x90°AT90°x930LG		
49		ELBOW	-		
50		ADAPTOR	-		
51		PIPE	-		
52		PIPE COUPLING	-		
53		SAE FLANGE	2"SAE 6000 BF004		
54		UNLOADING VALVE	RSU06-591-15A1		
55		PIPE COUPLING	-		
56					
57			-		
58		FILTER BRACKET	-		
59		FILTER	MDF BNHC160G10B1.0/BYP		
60		CHECK VALVE	CSV06-321-A1		
61		ISOLATING VALVE	108007		
62		ISOLATING VALVE	108008		
63	8	PLUG	-		
64	8	SAE 6000 FLANGE	BF018		
65		HOSE ASSEMBLY	2"45°x90°x1400LG		
66		HOSE ASSEMBLY	-		
67		HOSE ASSEMBLY	1/4"45°x90°x1340		
68		HOSE ASSEMBLY	1/4"90°x5Tx1580LG		
69		HOSE ASSEMBLY	1/4"90°x90°x1580LG		
70					
71					

FAVOR CONSULTAR NO SISTEMA, POIS PODERÁ EXISTIR REVISÕES MAIS ATUALIZADAS.

PURCHASER/PROJECT NAME:	BRASPETRO OIL SERVICES Comp. BRASOIL FPSO-VIDAL DE NEGREIROS
PURCHASE ORDER/CONTRACT No	P.O. VN. GSU-005A/96
PURCHASE REQUISITION No	RM-3010.31-21200-631-IVI-001
EQUIPMENT ITEM No.	GO 526 0028
EQUIPMENT DESIGNATION	DECK CRANES

REV	DESCRIPTION	BY/DATE	REV	DESCRIPTION	BY/DATE

TOLERANCE APPLICATION
SURFACE SYMBOLS TO BS.308-ISO/R1302
ALL SPECIAL TOLERANCES SHOWN TO BE ADHERED TO.
SYMBOL 'S' DENOTES LINEAR SIZES TO BE MAINTAINED.
ALL OTHER DIMENSIONS TO BE WITHIN ±0.5mm UNLESS OTHERWISE STATED.

MATERIAL --.-----.--
PATT.No -/-
WEIGHT Kgs
ROUGH -.--
FINISHED -.--

INDUSTRIAL POWER GROUP
CLARKE CHAPMAN MARINE

TITLE
POWER PACK ASSEMBLY

DRAWN	M.M.	DATE	8-5-97	DRAWING No.	REV
CHECKED	LDH	SCALE	1 7.5	CR346-30	0

A0

THIRD ANGLE PROJECTION USED ON THIS DRAWING UNLESS NOTED OTHERWISE BY ARROWS

DO NOT SCALE - IF IN DOUBT ASK

THIS DRAWING IS THE PROPERTY OF CLARKE CHAPMAN LTD. AND IS DISCLOSED ON THE UNDERSTANDING THAT IT IS KEPT STRICTLY CONFIDENTIAL. IT MUST NOT BE COPIED OR OTHERWISE DISCLOSED WITHOUT PRIOR WRITTEN CONSENT OF CLARKE CHAPMAN LTD.

REF No.	DESCRIPTION	DRG/IDEN No.	REV	No/SET
1	ROPE SEAL BKT R.H	97-15-208	0	1
2	ROPE SEAL BKT L.H	97-15-208	0	1
3	ROPE SEAL CLAMP	97-15-209	0	6
4	ROPE SEAL CLAMP-FRONT	97-15-210	0	2
5	ROPE SEAL CLAMP-REAR	97-15-211	0	1
6	ROPE SEAL CLAMP-FRONT	97-15-212	0	1
7	RUBBER SEAL-REAR	97-15-213	0	1
8	RUBBER SEAL-FRONT	97-15-214	0	1
9	BRACKET SEAL	97-15-215	0	2
10	ROPE SEAL BKT R.H	97-15-216	0	1
11	ROPE SEAL BKT L.H	97-15-217	0	1
12	ROPE SEAL CLAMP-REAR	97-15-218	0	2
13	ROPE SEAL CLAMP-FRONT	97-15-219	0	2
14	ROPE SEAL CLAMP	97-15-220	0	2
15	RUBBER SEAL-REAR	97-15-221	0	1
16	RUBBER SEAR-FRONT	97-15-222	0	1
17	BRACKET SEAL	97-15-223	0	2
18	ROPE SEAL BKT	97-15-224	0	2
19	ROPE SEAL CLAMP	97-15-230	0	2
20	RUBBER SEAL	97-15-231	0	2
21	BRACKET SEAL	97-15-232	0	2
22	ROPE SEAL CLAMP	97-15-238	0	1
23	ROPE SEAL CLAMP	97-15-239	0	1
24	RUBBER SEAL	97-15-240	0	1
25	RUBBER SEAL	97-15-241	0	1
26	ROPE SEAL CLAMP	97-15-243	0	2
27	RUBBER SEAL	97-15-244	0	1
28	M10 HEX HD.SCREW	-	-	117
29	M10 SPG WASHER	-	-	117
30	M10 HEX FULL NUT	-	-	36

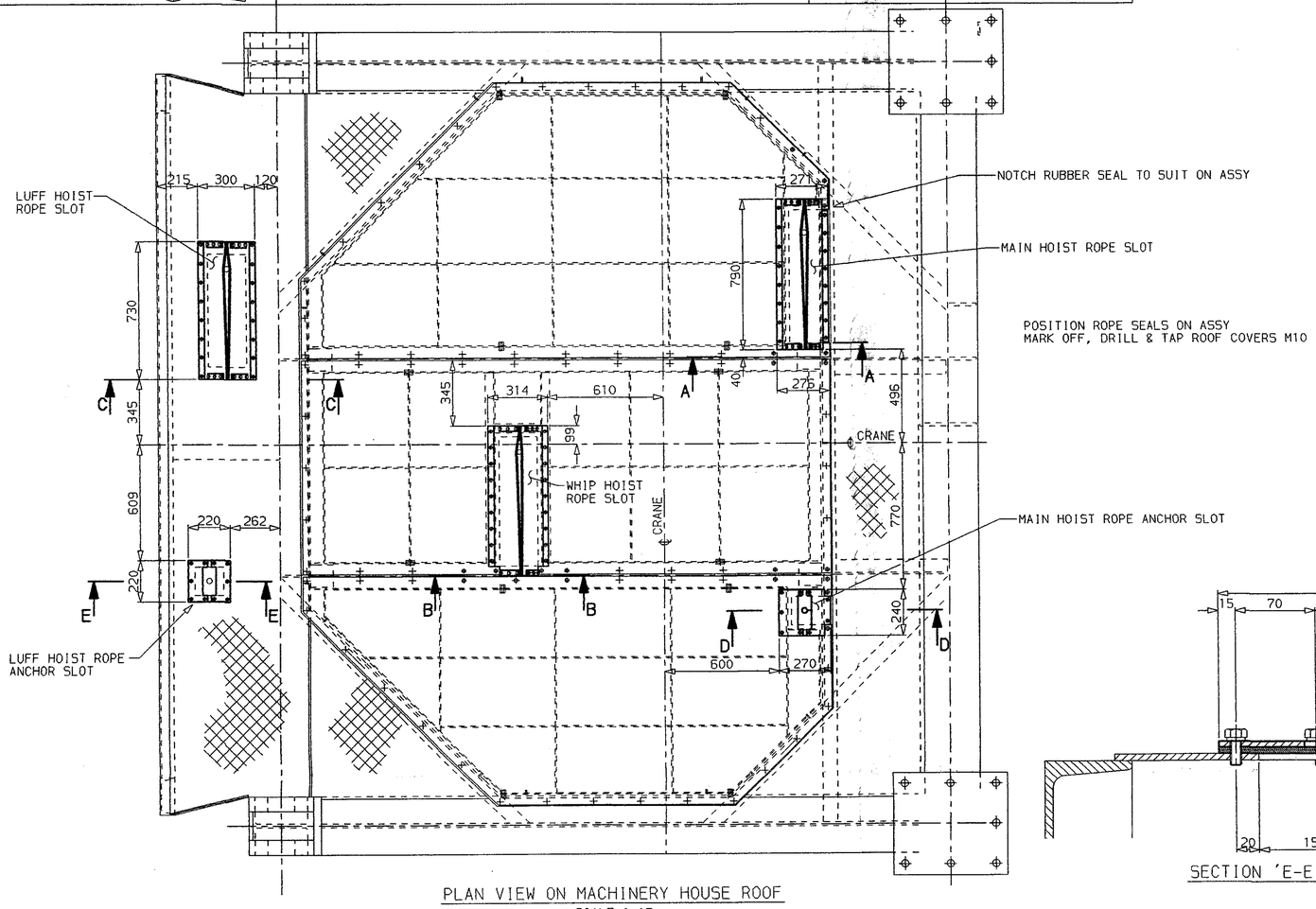

PLAN VIEW ON MACHINERY HOUSE ROOF
SCALE 1:15

SECTION 'E-E'

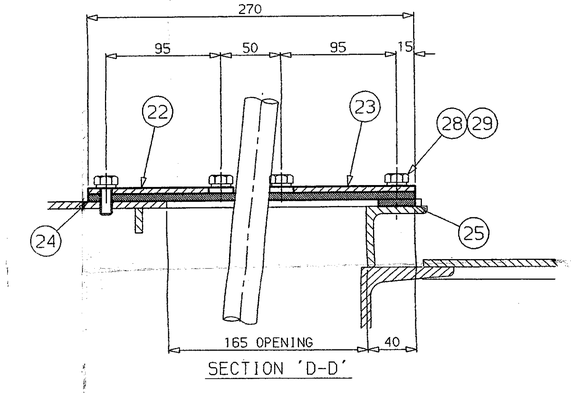

SECTION 'D-D'

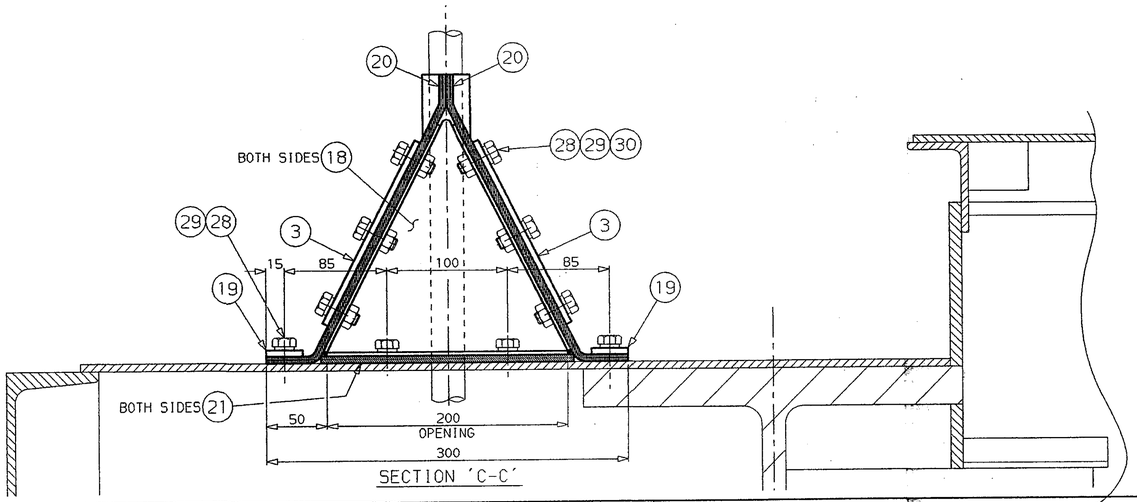

SECTION 'C-C'

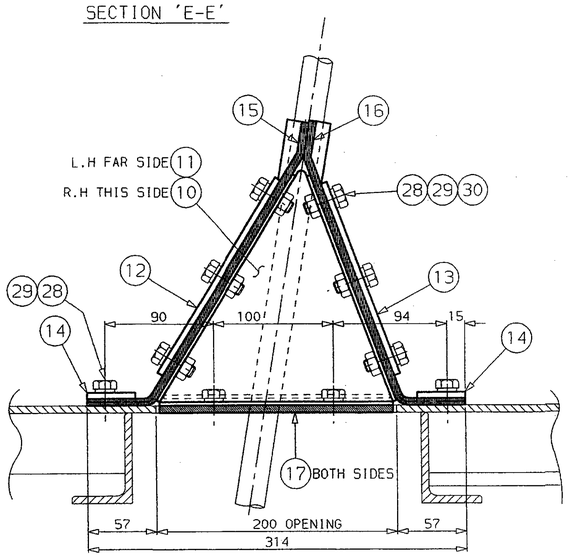

SECTION 'B-B'

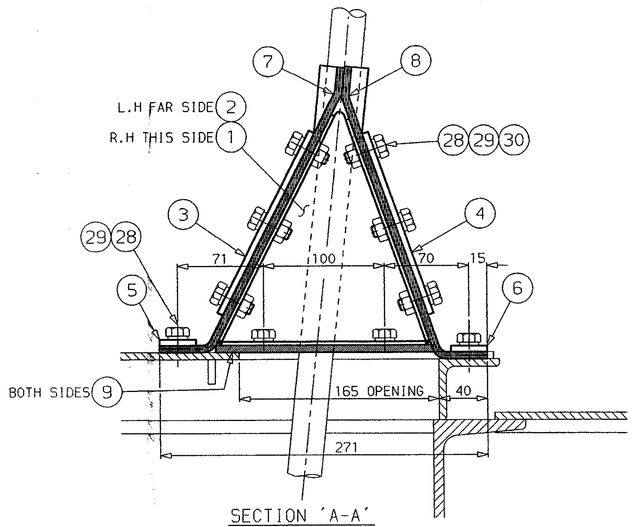

SECTION 'A-A'

REV	DESCRIPTION	BY/DATE	REV	DESCRIPTION	BY/DATE

PURCHASER/PROJECT NAME:	BRASPETRO OIL SERVICES COMPANY BRASOIL FPSO-VIDAL DE NEGREIROS
PURCHASE ORDER/CONTRACT No	P.O. VN. GSU-005A/96
PURCHASE REQUISITION No	RM-3010.31-21200-631-IVI-001
EQUIPMENT ITEM No.	GD 526 002 A
EQUIPMENT DESIGNATION	DECK CRANES

TOLERANCE APPLICATION
SURFACE SYMBOLS TO BS.308-ISO/R1302
ALL SPECIAL TOLERANCES SHOWN TO BE ADHERED TO.
SYMBOL 'G' DENOTES LINEAR SIZES TO BE MAINTAINED.
ALL OTHER DIMENSIONS TO BE WITHIN ±0.5mm UNLESS OTHERWISE STATED.

MATERIAL ---.---.---
PATT.No -/-
WEIGHT Kgs: ROUGH 31.6, FINISHED 31.6

INDUSTRIAL POWER GROUP
CLARKE CHAPMAN MARINE

TITLE
ROPE SEALING ASSEMBLY

DRAWN	R.P	DATE	22.6.97	DRAWING No.	REV
CHECKED		SCALE	1:2.5	XCR 346-38	0

A1

THIRD ANGLE PROJECTION USED ON THIS DRAWING UNLESS NOTED OTHERWISE BY ARROWS

DO NOT SCALE - IF IN DOUBT ASK

THIS DRAWING IS THE PROPERTY OF CLARKE CHAPMAN LTD. AND IS DISCLOSED ON THE UNDERSTANDING THAT IT IS KEPT STRICTLY CONFIDENTIAL. IT MUST NOT BE COPIED OR OTHERWISE DISCLOSED WITHOUT PRIOR WRITTEN CONSENT OF CLARKE CHAPMAN LTD.

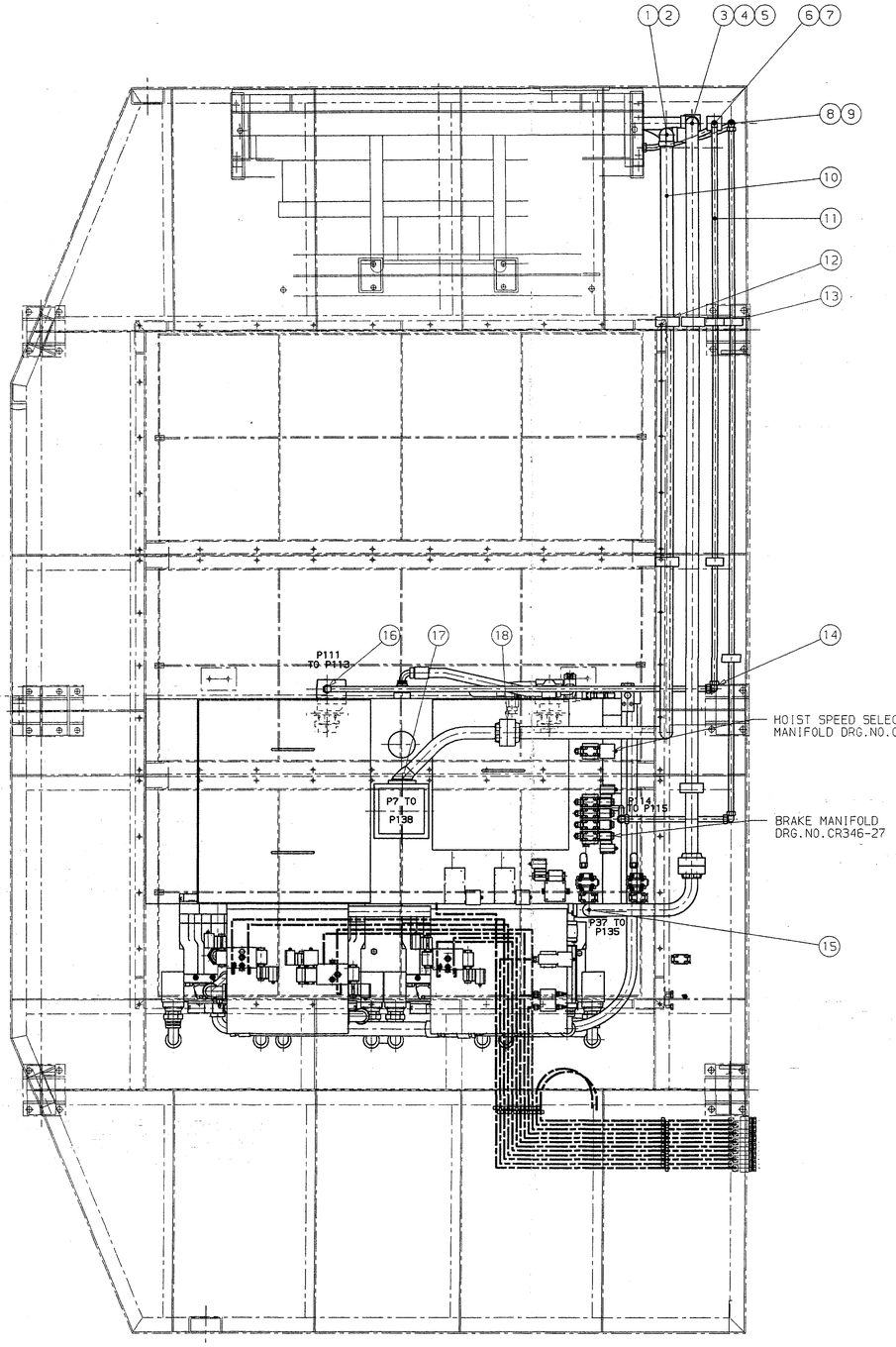

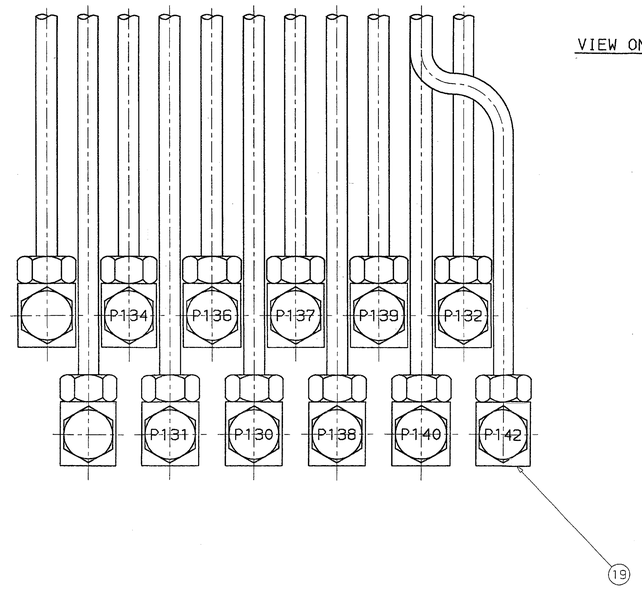

VIEW ON A

ITEM No.	QTY.	DESCRIPTION	DRG/IDEN NO.	TOTAL WGHT KG	REMARKS
1	1	HOSE ASSEMBLY	-		2"90°x90° AT 90° x 800LG
2	2	MALE MALE ADAPTOR	BF039		2"BSP
3	1	ISOLATING VALVE	-		KHBG 2"
4	1	HOSE ASSEMBLY	-		2"90° x ST x 680LG
5	3	EQUAL UNION	BF040		2"BSP MMA x 2"SWIV.F.
6	1	HOSE ASSEMBLY	-		1"90° x 45° x 1270LG
7	2	EQUAL UNION	BF041		1"MMA x 1"SWIV.F.
8	1	HOSE ASSEMBLY	-		1"45°xST x 650LG
9	2	EQUAL UNION	BF042		1"MMA
10		PIPE	BF043		ø2" NB
11		PIPE	BF044		1" x 2mm W.T.
12		PIPE CLAMP	BF045		STAUFF 60.5
13		PIPE CLAMP	BF046		STAUFF 25
14	5	ELBOW	BF047		25mm EQUAL
15	1	SAE FLANGE	BF048		SAE 3000 2"
16	1	MALE COUPLING	BF049		25mm MSC
17	1	SAE FLANGE	BF050		4"SAE 3000
18	2	SAE DOUBLE FLANGE	BF048		2"SAE 3000
19	12	BANJO	BF055		10mm
20		PIPE CLAMP	BF005		STAUFF 10mm
21		STRAIGHT COUPLING	BF053		10mm
22		PIPE	BF013		ø10mm
23		MALE STUD COUPLING	BF057		10mm x 3/8"

FAVOR CONSULTAR NO SISTEMA, POIS PODERÁ EXISTIR REVISÕES MAIS ATUALIZADAS.

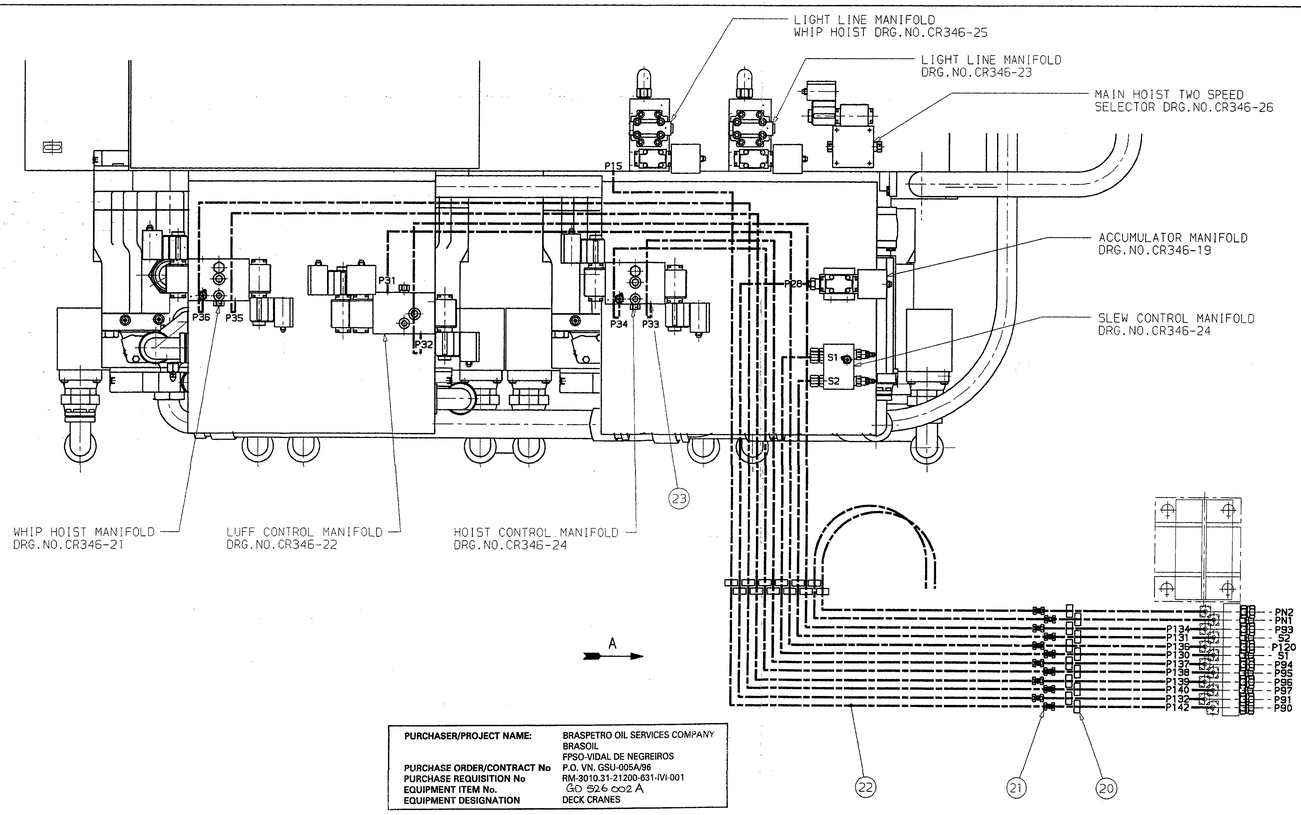

PURCHASER/PROJECT NAME:	BRASPETRO OIL SERVICES COMPANY BRASOIL FPSO-VIDAL DE NEGREIROS
PURCHASE ORDER/CONTRACT No	P.O. VN. GSU-005A/96
PURCHASE REQUISITION No	RM-3010.31-21200-631-IVI-001
EQUIPMENT ITEM No.	GD 5246 cc2 A
EQUIPMENT DESIGNATION	DECK CRANES

REV	DESCRIPTION	BY/DATE	REV	DESCRIPTION	BY/DATE
A	PIPE LAYOUT ALTERED	NDS 14-10-97			

TOLERANCE APPLICATION
SURFACE SYMBOLS TO BS.308-ISO/R1302
ALL SPECIAL TOLERANCES SHOWN TO BE ADHERED TO.
SYMBOL 'G' DENOTES LINEAR SIZES TO BE MAINTAINED.
ALL OTHER DIMENSIONS TO BE WITHIN ±0.5mm UNLESS OTHERWISE STATED.

MATERIAL ---------
PATT.No -/-
WEIGHT Kgs
ROUGH -.--
FINISHED -.--

INDUSTRIAL POWER GROUP
CLARKE CHAPMAN MARINE

TITLE ARRANGEMENT OF COOLER AND CONTROL PIPES

DRAWN	M.M.	DATE	30-9-97	DRAWING No.	REV
CHECKED	LDH	SCALE	1:10	CR346-39	A

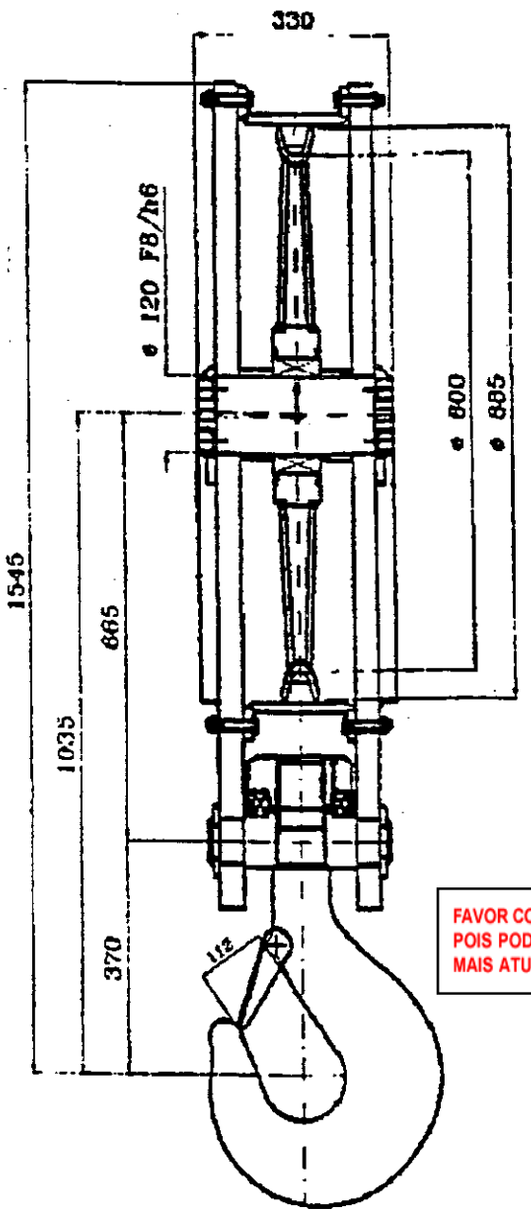

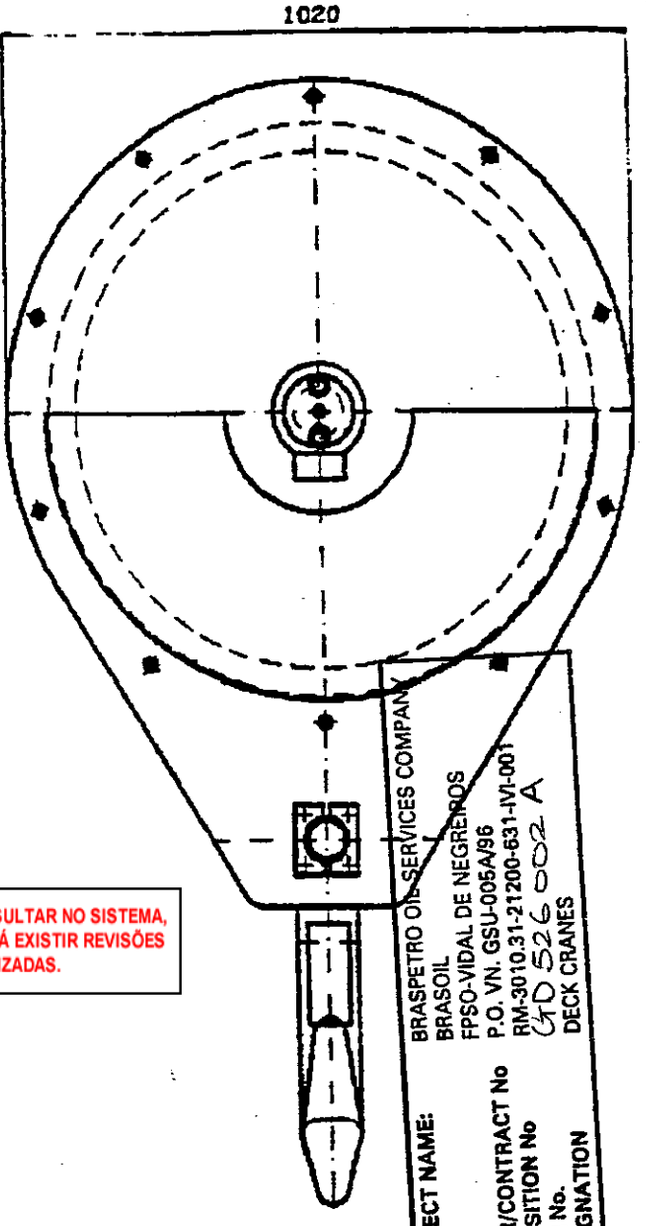

FAVOR CONSULTAR NO SISTEMA, POIS PODERÁ EXISTIR REVISÕES MAIS ATUALIZADAS.

N.	GRUPO		CARGA	VIDA	CABLE	CLASE	REFERENCIA
	FEM	DIN	t	h	d1	MAT.	
16	M5	2m	22	6300	28	T	06-00032

PURCHASER/PROJECT NAME: BRASPETRO OIL SERVICES COMPANY
BRASOIL
FPSO-VIDAL DE NEGREIROS
P.O. VN. GSU-005A/96
PURCHASE ORDER/CONTRACT No RM-3010.31-21200-631-IVI-001
PURCHASE REQUISITION No GD 526 002 A
EQUIPMENT ITEM No. DECK CRANES
EQUIPMENT DESIGNATION

	Fecha	Firma
Dibujado	03-04-97	
Revisado	21-04-97	
Modificado		

GOSAN, S.A.

0.2/ 0.4/ 0.8/ 1.6/ 3.2/ 6.3/ 12.5/

Escala	N. piezas	Marca	Peso(Kg)	Material	Tratamiento	Ref. cliente:	IRUGASA U.K.
x	3		1000				

Nombre de la pieza:	Nombre del conjunto	N. oferta:	19.094-Mod IV
Aparejo N. 16	APAREJO 1 POLEA	N. pedido:	97/255-A
		N. plano:	4-54605

CR 4834 /R

THIRD ANGLE PROJECTION USED ON THIS DRAWING UNLESS NOTED OTHERWISE BY ARROWS

DO NOT SCALE - IF IN DOUBT ASK

THIS DRAWING IS THE PROPERTY OF CLARKE CHAPMAN LTD. AND IS DISCLOSED ON THE UNDERSTANDING THAT IT IS KEPT STRICTLY CONFIDENTIAL. IT MUST NOT BE COPIED OR OTHERWISE DISCLOSED WITHOUT PRIOR WRITTEN CONSENT OF CLARKE CHAPMAN LTD.

REF No.	DESCRIPTION	DRG/IDEN No.	REV	No/SET
1	BACKPLATE	97-15-225	0	1
2	HALF CLAMP	97-15-226	0	1
3	HALF CLAMP	97-15-227	0	1
4	KEEP	97-15-228	0	2
5	INDICATOR PLATE	97-15-235	A	1
6	INDICATOR ARM	97-15-229	0	1
7	SWIVEL PIN	97-15-190	0	1
8	WASHER	97-15-191	0	1
9	OILITE BUSH	-	-	1
10	GREASE NIPPLE	-	-	1
11	M36 NYLOC NUT	-	-	1
12	M16 HEX HD SCREW	-	-	4
13	M16 HEX HD BOLT	-	-	4
14	M16 SHAKEPROOF WASHER	-	-	8
15	M6 HEX HD SCREW	-	-	12
16	M6 HEX FULL NUT	-	-	12
17	M6 FLAT WASHER	-	-	12
18	M6 SHAKEPROOF WASHER	-	-	12

FAVOR CONSULTAR NO SISTEMA, POIS PODERÁ EXISTIR REVISÕES MAIS ATUALIZADAS.

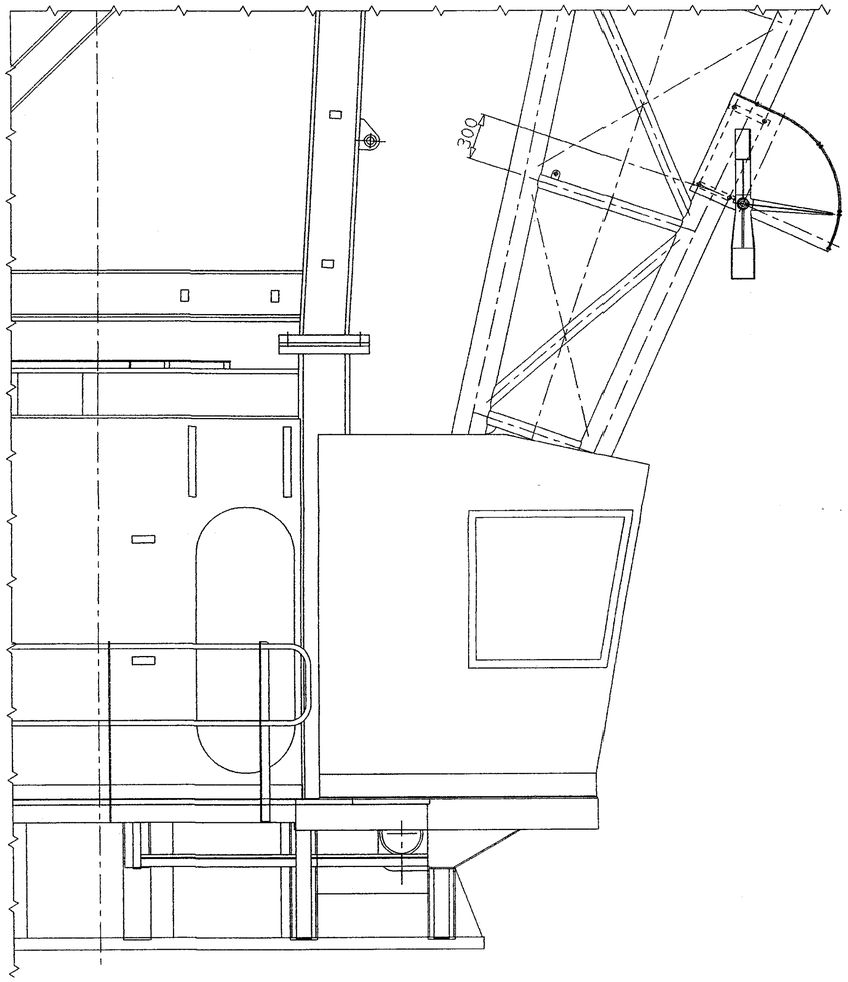

SCALE 1:20

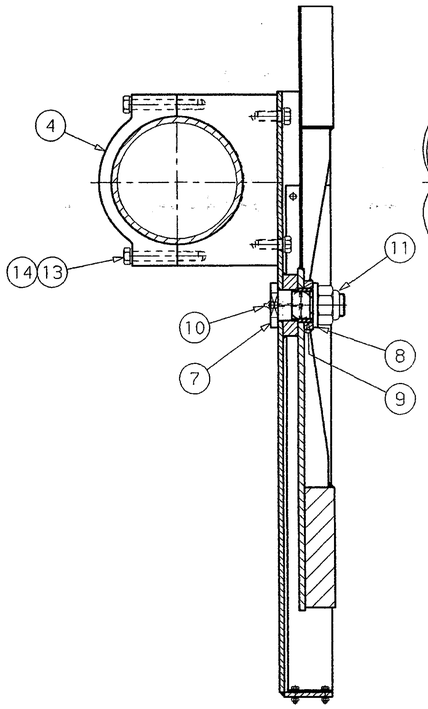

SECTION 'A-A'

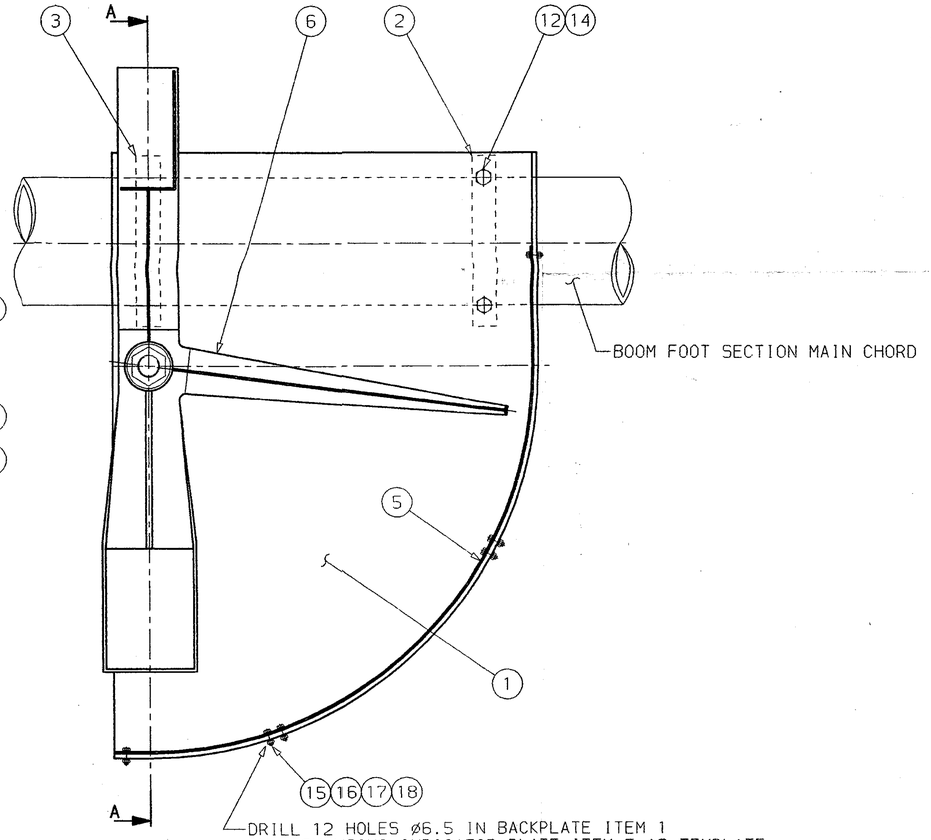

REV	DESCRIPTION	BY/DATE	REV	DESCRIPTION	BY/DATE

PURCHASER/PROJECT NAME:	BRASPETRO OIL SERVICES COMPANY BRASOIL FPSO-VIDAL DE NEGREIROS
PURCHASE ORDER/CONTRACT No	P.O. VN. GSU-005A/96
PURCHASE REQUISITION No	RM-3010.31-21200-631-IVI-001
EQUIPMENT ITEM No.	GD 526 002 A
EQUIPMENT DESIGNATION	DECK CRANES

TOLERANCE APPLICATION
SURFACE SYMBOLS TO BS. 308-ISO/R1302
ALL SPECIAL TOLERANCES SHOWN TO BE ADHERED TO.
SYMBOL 'G' DENOTES LINEAR SIZES TO BE MAINTAINED.
ALL OTHER DIMENSIONS TO BE WITHIN ±0.5mm UNLESS OTHERWISE STATED.

MATERIAL --.------.--
PATT.No -/-
WEIGHT Kgs

ROUGH	-.--	DRAWN	R.P	DATE	20.6.97	DRAWING No. XCR 346-41 REV 0
FINISHED	95.5	CHECKED		SCALE	1:5	

INDUSTRIAL POWER GROUP
CLARKE CHAPMAN MARINE

TITLE
RADIUS INDICATOR ASSY - AFT & MIDSHIP CRANES

THIRD ANGLE PROJECTION USED ON THIS DRAWING UNLESS NOTED OTHERWISE BY ARROWS

DO NOT SCALE - IF IN DOUBT ASK

THIS DRAWING IS THE PROPERTY OF CLARKE CHAPMAN LTD. AND IS DISCLOSED ON THE UNDERSTANDING THAT IT IS KEPT STRICTLY CONFIDENTIAL. IT MUST NOT BE COPIED OR OTHERWISE DISCLOSED WITHOUT PRIOR WRITTEN CONSENT OF CLARKE CHAPMAN LTD.

LUFF MOTOR

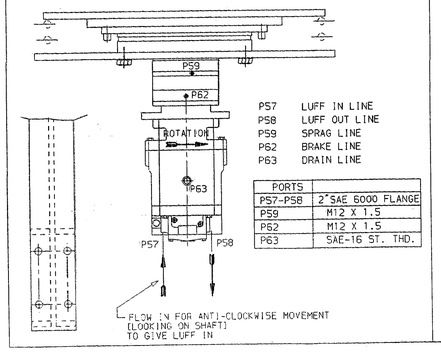

P57	LUFF IN LINE
P58	LUFF OUT LINE
P59	SPRAG LINE
P62	BRAKE LINE
P63	DRAIN LINE

PORTS	
P57-P58	2"SAE 6000 FLANGE
P59	M12 X 1.5
P62	M12 X 1.5
P63	SAE-16 ST. THD.

WHIP HOIST MOTOR

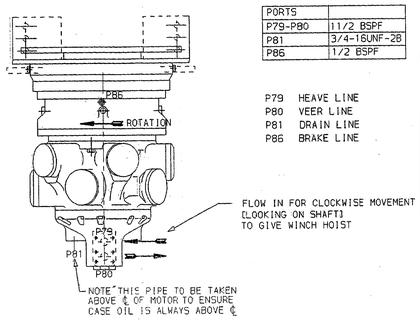

PORTS	
P79-P80	11/2 BSPF
P81	3/4-16UNF-2B
P86	1/2 BSPF

P79	HEAVE LINE
P80	VEER LINE
P81	DRAIN LINE
P86	BRAKE LINE

MAIN HOIST MOTOR

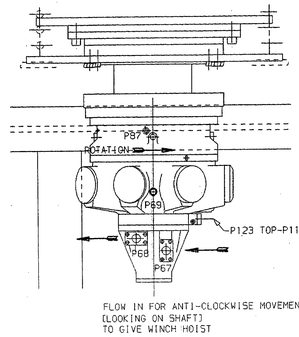

P67	HEAVE LINE
P68	VEER LINE
P69	DRAIN LINE
P87	BRAKE LINE
P119	HIGH SPEED
P123	LOW SPEED

PORTS	
P67-P68	11/2 SAE CODE 62 4 BOLT FLANGE
P69	3/4-16 UNF-2B
P87	1/2 BSPF
P119-P123	1/4 BSPF

SOLENOID DE-ENERGIZED :-NORMAL OPERATION

LOW SPEED [P108-P123]

SOLENOID ENERGIZED :-LIGHT LINE

HIGH SPEED [P109-P119]

SLEW MOTOR

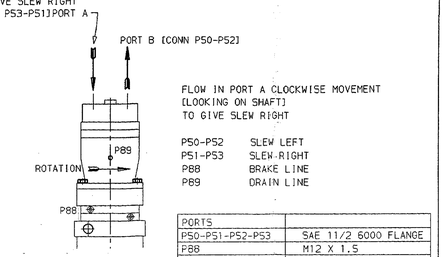

P50-P52	SLEW LEFT
P51-P53	SLEW-RIGHT
P88	BRAKE LINE
P89	DRAIN LINE

PORTS	
P50-P51-P52-P53	SAE 11/2 6000 FLANGE
P88	M12 X 1.5
P89	SAE 16 ST.THD.

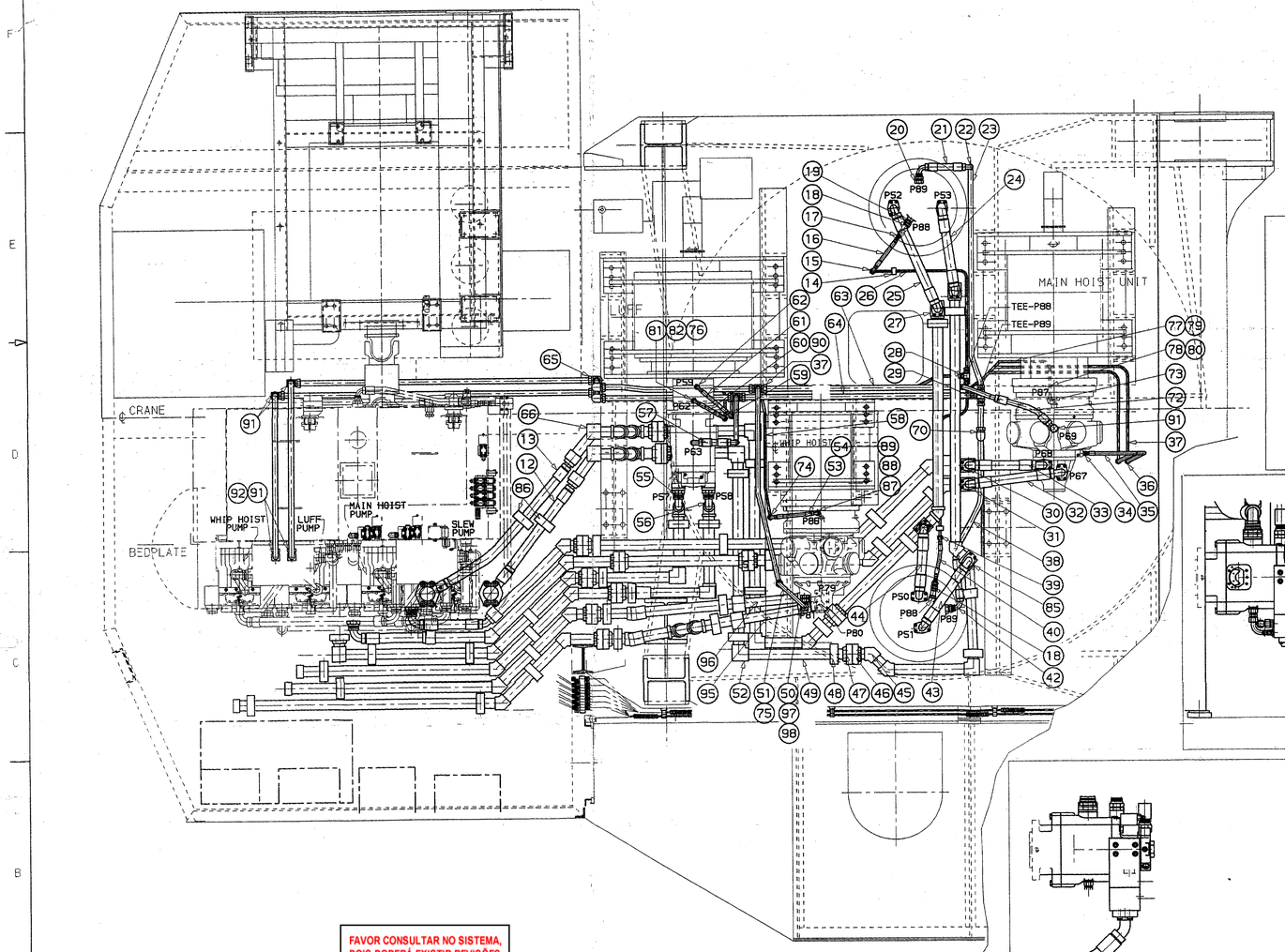

FAVOR CONSULTAR NO SISTEMA, POIS PODERÁ EXISTIR REVISÕES MAIS ATUALIZADAS.

WHIP HOIST PUMP HOSES

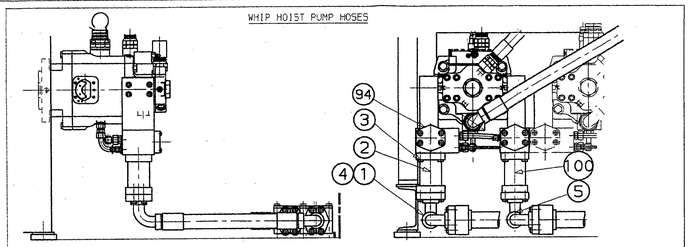

LUFF PUMP HOSES

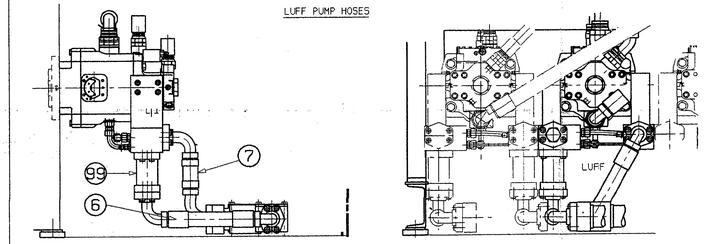

MAIN HOIST PUMP PIPES

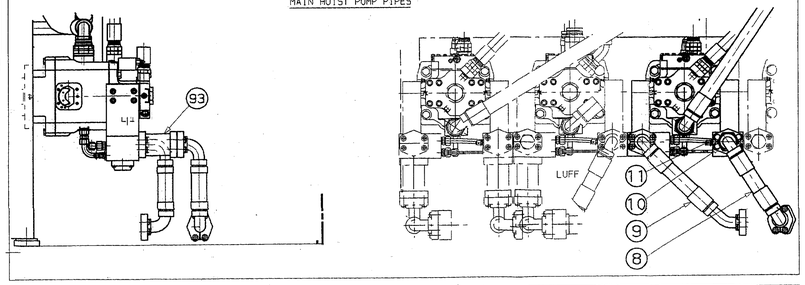

SLEW PUMP PIPES

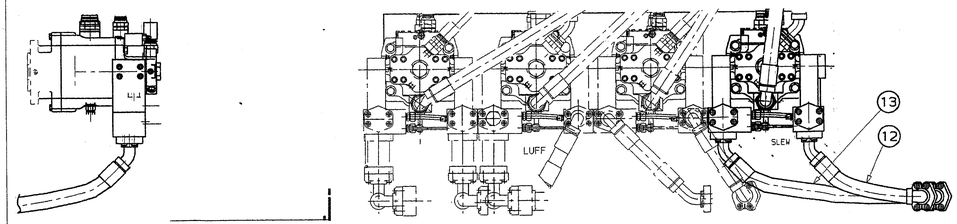

ITEM No.	QTY.	DESCRIPTION	DRG/IDEN NO.	TOTAL WGHT KGS	REMARKS
1	1	FLEXIBLE HOSE			SEE HOSE CHART
2		PIPE ADAPTOR	2"SAE 6000		BF001
3		BOLTS	BF002		3/4 UNC X 2 3/4 LONG
4		BOLTS	BF003		M20x70
5	1	FLEXIBLE HOSE			SEE HOSE CHART
6	1	FLEXIBLE HOSE			SEE HOSE CHART
7	1	FLEXIBLE HOSE			SEE HOSE CHART
8	1	FLEXIBLE HOSE			SEE HOSE CHART
9	1	FLEXIBLE HOSE			SEE HOSE CHART
10		SAE FLANGE	BF004		2"BSP SAE 6000
11		BOLTS FOR ITEM 10	BF002		3/4 UNC X 2 3/4 LONG
12	1	FLEXIBLE HOSE			SEE HOSE CHART
13	1	FLEXIBLE HOSE			SEE HOSE CHART
14		PIPE CLAMP	BF005		
15		ADAPTOR	BF006		10mmS.PIPEx3/8"BSP
16	1	FLEXIBLE HOSE			SEE HOSE CHART
17		ADAPTOR	BF007		3/8"M/M
18		QUICK RELEASE COUPLING	BF008		3/8"
19		ADAPTOR	BF009		M12x3/8M BSP
20		ADAPTOR	BF010		SAE 16x1 1/4M BSP
21	1	FLEXIBLE HOSE			SEE HOSE CHART
22		ADAPTOR	BF011		42mm MSCx1 1/4"BSP
23		STEEL PIPE	BF012		42MM
24	1	FLEXIBLE HOSE			SEE HOSE CHART
25	1	FLEXIBLE HOSE			SEE HOSE CHART
26		STEEL PIPE	BF013		10MM
27		JUNCTION BLOCK	BF014		1 1/2"
28		TEE PIECE	BF015		10MM S/P TEE
29		TEE PIECE	BF016		42MM S/P TEE
30		JUNCTION BLOCK	BF014		1 1/2"
31		FLANGE BOLTS			
32	1	FLEXIBLE HOSE			SEE HOSE CHART
33	1	FLEXIBLE HOSE			SEE HOSE CHART
34		ADAPTOR	BF0017		1/4"x3/8"BSP
35		FLEXIBLE HOSE			SEE HOSE CHART
36		ADAPTOR	BF006		
37		STEEL PIPE	BF013		10MM
38		STEEL PIPE	BF012		42MM
39		ADAPTOR	BF033		10MM M x 3/8"BSP M
40	1	FLEXIBLE HOSE			SEE HOSE CHART
41		PIPE CLAMP			
42	1	FLEXIBLE HOSE			SEE HOSE CHART
43	1	FLEXIBLE HOSE			SEE HOSE CHART
44	1	FLEXIBLE HOSE			SEE HOSE CHART
45		45 ELBOW	BF034		76.1 OD x 45°
46		SAE FLANGE	BF018		3"6000
47		SAE FLANGE	BF018		3"6000
48		PIPE CLAMP	BF019		76MM STAUFF CLAMP
49		STEEL PIPE	BF035		76.1 OD
50		ADAPTOR	BF020		3 UNF Mx1"BSP M
51	1	FLEXIBLE HOSE			SEE HOSE CHART
52		90 ELBOW	BF021		90°x76.1MM OD
53	1	FLEXIBLE HOSE			SEE HOSE CHART
54		ADAPTOR	BF022		1/2"BSPx3/8"BSP
55	1	FLEXIBLE HOSE			SEE HOSE CHART
56	1	FLEXIBLE HOSE			SEE HOSE CHART
57	1	FLEXIBLE HOSE			SEE HOSE CHART
58		STEEL PIPE	BF036		16MM
59		ADAPTOR	BF033		10MMx3/8"BSP M
60	1	FLEXIBLE HOSE			SEE HOSE CHART
61	1	FLEXIBLE HOSE			SEE HOSE CHART
62		ADAPTOR	BF009		M12x3/8"BSP M
63		STEEL PIPE	BF012		42MM
64		STEEL PIPE	BF012		42MM
65		90 ELBOW	BF023		90°x42MM
66		90 ELBOW	BF021		90°x76.1MM
67	1	FLEXIBLE HOSE			SEE HOSE CHART
68	1	FLEXIBLE HOSE			SEE HOSE CHART
69		ADAPTOR	BF024		SAE 20Mx1 1/4"BSP M
70		90 ELBOW	BF023		90°x42MM
71		ADAPTOR	BF020		3/4UNF Mx1"BSP M
72	1	FLEXIBLE HOSE			SEE HOSE CHART
73		ADAPTOR	BF025		42MM S/P M x1"BSP M
74		ADAPTOR	BF026		16MM S/P Mx3/8"BSP M
75		ADAPTOR	BF025		42MM S/P M x1"BSP M
76		ADAPTOR	BF009		M12 Mx3/8"BSP M
77		STEEL PIPE	BF036		16MM
78	1	FLEXIBLE HOSE			SEE HOSE CHART
79		ADAPTOR	BF026		16MM SP Mx3/8"BSP M
80		ADAPTOR	BF022		1/2"BSP Mx3/8"BSP M
81		QUICK RELEASE COUPLING	BF008		3/8"
82		ADAPTOR	BF007		3/8"BSP Mx3/8"BSP M
83		ADAPTOR DRAIN	BF037		42MMx1 1/4"BSP M
84		TEE PIECE	BF027		42 M/M
85	2	TEE PIECE	BF028		76.1MM OD
86	2	STAUFF CLAMP	BF019		STAUFF 76 M/M
87		BRAKE ADAPTOR	BF022		1/2"BSP Mx3/8"BSP M
88		QUICK RELEASE COUPLING	BF008		3/8"
89		ADAPTOR M/M	BF007		3/8"BSP Mx3/8"BSP M
90		ADAPTOR M/M	BF023		3/8"BSP Mx3/8"BSP M
91	6	90 ELBOW	BF023		42MM 90°
92	2	ADAPTOR	BF030		1 1/2"BSP Mx42MM MSC M
93	1	ADAPTOR	BF001		2"x6000MM
94	8	BLANKING FLANGE	BF031		2"SAE 6000
95	1	FLEXIBLE HOSE			SEE HOSE CHART
96	1	FLEXIBLE HOSE			SEE HOSE CHART
97		ADAPTOR PLATE	BF037		6 BOLT 75048
98	2	ADAPTOR M/M	BF032		1 1/2"BSPMx1 1/2"BSPM
99	1	PIPE ADAPTOR			2"SAE 6000
100	1	PIPE ADAPTOR			2"SAE 6000

PURCHASER/PROJECT NAME:	BRASPETRO OIL SERVICES COMPANY BRASOIL FPSO-VIDAL DE NEGREIROS
PURCHASE ORDER/CONTRACT No	P.O. VN. GSU-005A/96
PURCHASE REQUISITION No	RM-3010.31-21200-631-IVI-001
EQUIPMENT ITEM No.	GD 526 0028
EQUIPMENT DESIGNATION	DECK CRANES

REV	DESCRIPTION	BY/DATE	REV	DESCRIPTION	BY/DATE

TOLERANCE APPLICATION
SURFACE SYMBOLS TO BS.308-ISO/R302
ALL SPECIAL TOLERANCES SHOWN TO BE ADHERED TO.
SYMBOL '0' DENOTES LINEAR SIZES TO BE MAINTAINED.
ALL OTHER DIMENSIONS TO BE WITHIN ±0.5mm UNLESS OTHERWISE STATED.

MATERIAL ---.---.---
PATT.No -/-
WEIGHT Kgs
ROUGH -.--
FINISHED -.--

INDUSTRIAL POWER GROUP
CLARKE CHAPMAN MARINE

TITLE
PIPE ASSEMBLY

DRAWN	M.M.	DATE	29-7-97	DRAWING No.	REV
CHECKED	L.D.H.	SCALE	1 15	CR346-28	0

THIRD ANGLE PROJECTION USED ON THIS DRAWING UNLESS NOTED OTHERWISE BY ARROWS

DO NOT SCALE – IF IN DOUBT ASK

THIS DRAWING IS THE PROPERTY OF CLARKE CHAPMAN LTD. AND IS DISCLOSED ON THE UNDERSTANDING THAT IT IS KEPT STRICTLY CONFIDENTIAL. IT MUST NOT BE COPIED OR OTHERWISE DISCLOSED WITHOUT PRIOR WRITTEN CONSENT OF CLARKE CHAPMAN LTD.

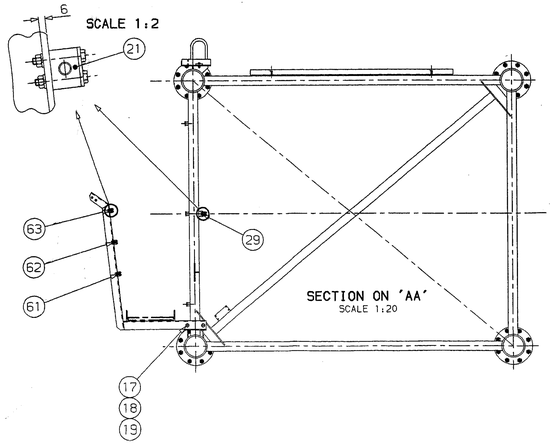

SECTION ON 'AA'
SCALE 1:20

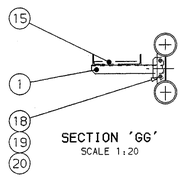

SECTION 'GG'
SCALE 1:20

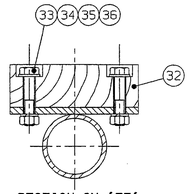

SECTION ON 'EE'
TYPICAL SECTION THRO' RUBBING STRIP
SCALE 4:10

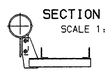

SECTION 'HH'
SCALE 1:20

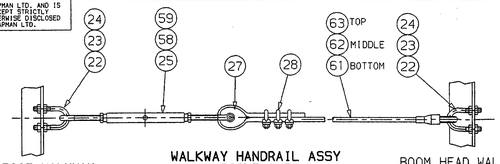

BOOM FOOT WALKWAY BOTTOM STANCHION

WALKWAY HANDRAIL ASSY
SCALE 1:5

BOOM HEAD WALKWAY TOP STANCHION

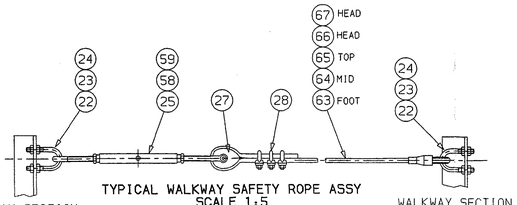

WALKWAY SECTION BOTTOM STANCHION

TYPICAL WALKWAY SAFETY ROPE ASSY
SCALE 1:5

WALKWAY SECTION TOP STANCHION

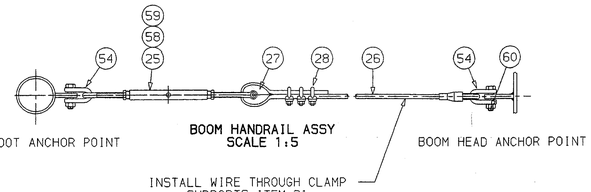

BOOM FOOT ANCHOR POINT

BOOM HANDRAIL ASSY
SCALE 1:5

BOOM HEAD ANCHOR POINT

INSTALL WIRE THROUGH CLAMP SUPPORTS ITEM 21

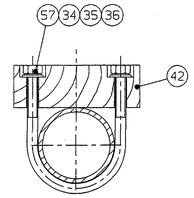

SECTION ON 'FF'
TYPICAL SECTION THRO' RUBBING STRIP
SCALE 4:10

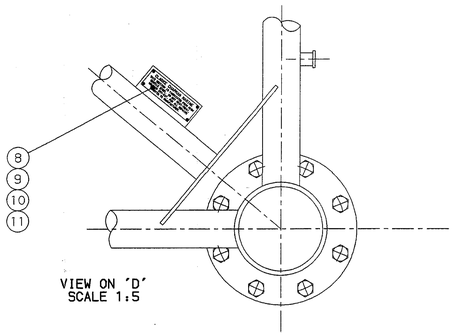

VIEW ON 'D'
SCALE 1:5

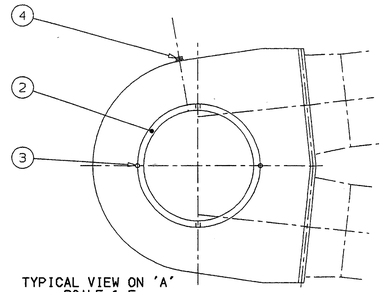

TYPICAL VIEW ON 'A'
SCALE 1:5

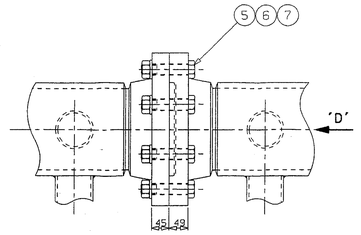

TYPICAL VIEW 'B'
SCALE 1:5

FAVOR CONSULTAR NO SISTEMA, POIS PODERÁ EXISTIR REVISÕES MAIS ATUALIZADAS.

REF No.	DESCRIPTION	DRG/IDEN No.	REV	No/SET
1	BOOM FOOT SECTION	97/15/1	E	1
2	BUSH	97/15/40	0	2
3	C'SUNK SCREW	–	–	8
4	GREASE NIPPLE	–	–	2
5	HEX HEAD BOLT	–	–	128
6	FULL NUT	–	–	128
7	WASHER	97/15/6	A	128
8	WARNING PLATE	97/15/61	0	5
9	HEX HEAD SCREW	–	–	20
10	FULL NUT	–	–	20
11	SHAKEPROOF WASHER	–	–	20
12	THRUST WASHER	97/15/46-1	1	2
13	THRUST WASHER	97/15/46-2	A	2
14	C'SUNK SCREW	–	–	24
15	BOOM FOOT WALKWAY	97/15/125	A	1
16	GRATINGS (SET)	CRS 5857	–	1
17	HEX HEAD SCREW	–	–	54
18	FULL NUT	–	–	96
19	SHAKEPROOF WASHER	–	–	100
20	HEX HEAD SCREW	–	–	46
21	PIPE CLAMP	–	–	120
22	'U' BOLT	97/15/201	0	20
23	FULL NUT	–	–	80
24	SHAKEPROOF WASHER	–	–	52
25	RIGGING SCREW	–	–	10
26	SAFETY ROPE (BOTTOM)	97-15-256	–	8
27	THIMBLE	–	–	11
28	ROPE CLIP	–	–	12
29	HAND ROPE (BOOM)	97-15-259	–	1
30	BOOM CENTRE SECTION	97-15-86	0	1
31	RUBBING STRIP	97/15/35	0	5
32	RUBBING STRIP	97/15/52	0	1
33	HEX HEAD SCREW	–	–	28
34	FULL NUT	–	–	48
35	FLAT WASHER	–	–	48
36	SHAKEPROOF WASHER	–	–	48
37	BOOM REST	97-15-75	0	2
38	BOOM REST	97-15-80	0	1
39	BOOM CENTRE WALKWAY	97/15/36	C	3
40	GRATINGS (SET)	CRS 5856	–	3
41	BOOM CENTRE SECTION	97/15/12	C	1
42	RUBBING STRIP	97/15/6	0	–
43	BOOM CENTRE SECTION	97/15/73	0	1
44	BOOM REST	97-15-74	0	1
45	BOOM HEAD SECTION	97/15/15	B	1
46	RUBBING STRIP	97/15/38	0	1
47	BOOM HEAD WALKWAY	97/15/174	0	1
48	GRATINGS (SET)	CRS 5843	–	1
49	BOOM HEAD	97/15/182	A	1
50	MOUNTING PLATE	97/15/172	0	1
51	HEX HEAD SCREW	–	–	3
52	FULL NUT	–	–	3
53	SHAKEPROOF WASHER	–	–	3
54	SHACKLE	–	–	2
55	BOOM HEAD WALKWAY	97-15-181	0	1
56	GRATINGS (SET)	CRS 5844	0	1
57	'U' BOLT	–	–	10
58	THIN NUT (RIGHT HAND)	–	–	10
59	THIN NUT (LEFT HAND)	–	–	10
60	1/16" COTTER PIN	–	–	2
61	HAND ROPE (BOTTOM)	97-15-260	–	1
62	HAND ROPE (MIDDLE)	97-15-261	–	1
63	HAND ROPE (TOP)	97-15-262	–	1
64	SAFETY ROPE	97-15-255	–	3
65	SAFETY ROPE	97-15-257	–	1
66	SAFETY ROPE	97-15-258	–	1
67	SAFETY ROPE	97-15-252	–	1
68	BOOM HEAD EXTENSION	97-15-117	C	1

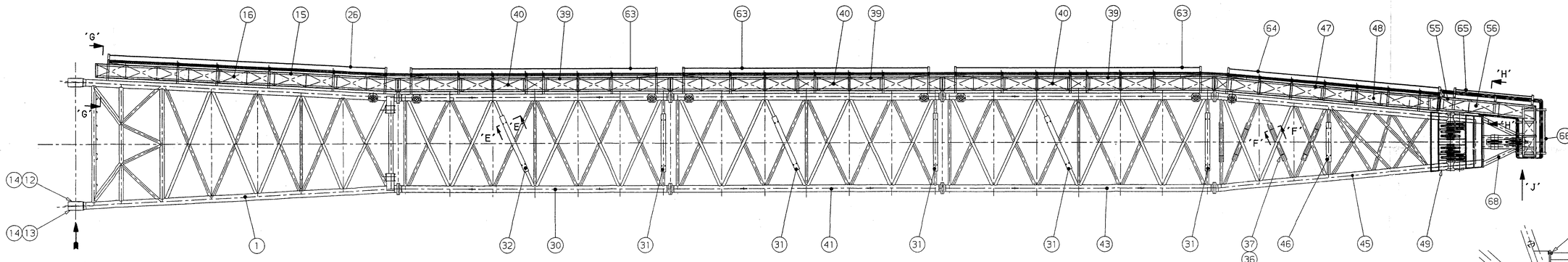

VIEW 'A'

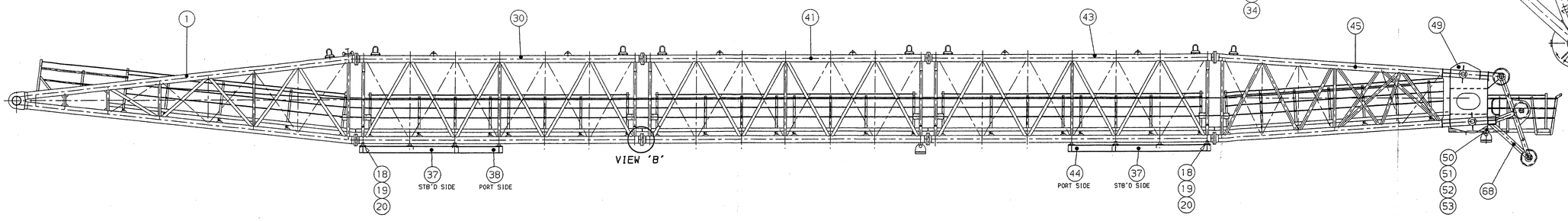

VIEW 'B'

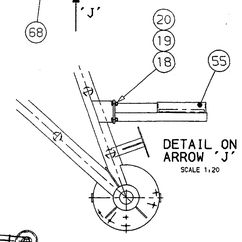

DETAIL ON ARROW 'J'
SCALE 1:20

REV	DESCRIPTION	BY/DATE	REV	DESCRIPTION	BY/DATE
B	FIRST ISSUE	JPS 04.12.97			

PURCHASER/PROJECT NAME:	BRASPETRO OIL SERVICES COMPANY BRASOIL FPSO-VIDAL DE NEGREIROS
PURCHASE ORDER/CONTRACT No	P.O. VN. GSU-005A/96
PURCHASE REQUISITION No	RM-3010.31-21200-631-IVI-001
EQUIPMENT ITEM No.	GD 526 002 B.
EQUIPMENT DESIGNATION	DECK CRANES

TOLERANCE APPLICATION
SURFACE SYMBOLS TO BS.308-1:50/R1302
ALL SPECIAL TOLERANCES SHOWN TO BE ADHERED TO.
SYMBOL 'G' DENOTES LINEAR SIZES TO BE MAINTAINED.
ALL OTHER DIMENSIONS TO BE WITHIN ±0.5mm UNLESS OTHERWISE STATED.

MATERIAL: SEE TABLE
PATT.No
WEIGHT kg: ROUGH | FINISHED 24806

INDUSTRIAL POWER GROUP
CLARKE CHAPMAN MARINE

TITLE: FORWARD CRANE BOOM ASSEMBLY

DRAWN JPS | DATE 21-11-97 | SCALE 1:50 | CHECKED

DRAWING No. XCR346-15 | REV B

THIRD ANGLE PROJECTION USED ON THIS DRAWING UNLESS NOTED OTHERWISE BY ARROWS

DO NOT SCALE - IF IN DOUBT ASK

THIS DRAWING IS THE PROPERTY OF CLARKE CHAPMAN LTD. AND IS DISCLOSED ON THE UNDERSTANDING THAT IT IS KEPT STRICTLY CONFIDENTIAL. IT MUST NOT BE COPIED OR OTHERWISE DISCLOSED WITHOUT PRIOR WRITTEN CONSENT OF CLARKE CHAPMAN LTD.

NOTES:- OIL CAPACITY:-1810 LTRS .
PLATE THICKNESS:-5 M.M.
PLATE MATERIAL:-ST.STL.316L
INSIDE OF RESERVOIR WALLS TO HAVE STRENGTHENING RIBS
DOWNPIPE ON RETURN FILTER MUST BE REMOVED TO
ENABLE FILTER TO BE WITHDRAWN

FAVOR CONSULTAR NO SISTEMA, POIS PODERÁ EXISTIR REVISÕES MAIS ATUALIZADAS.

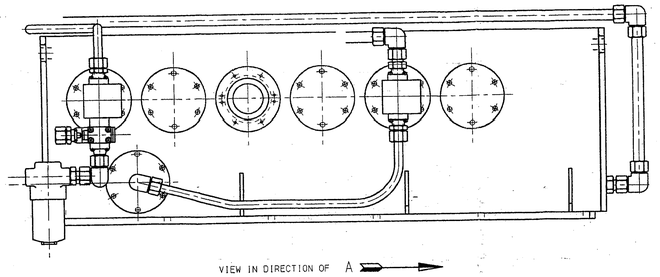

VIEW IN DIRECTION OF A

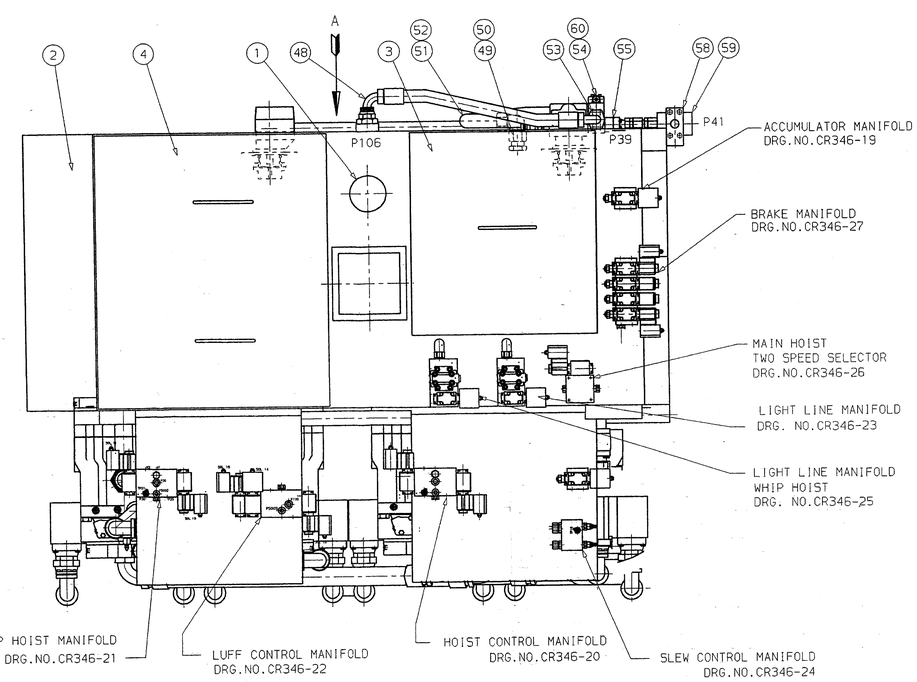

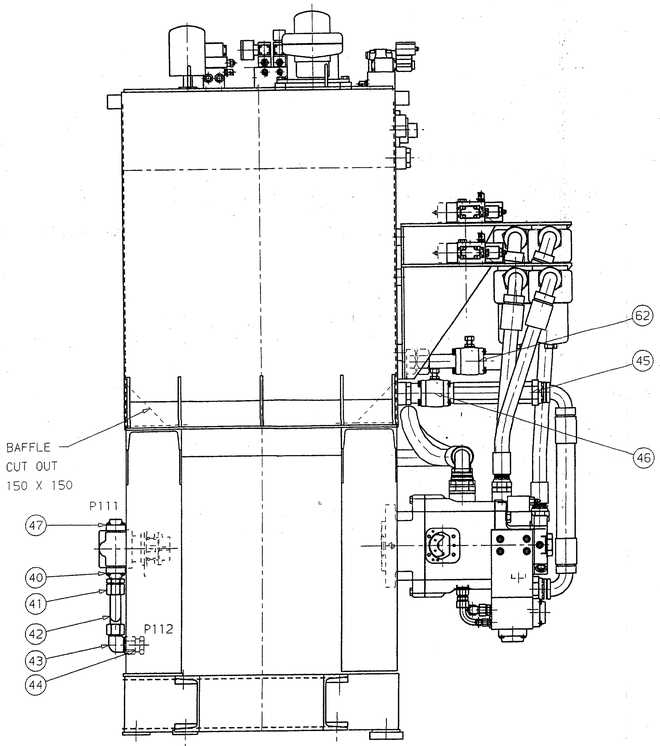

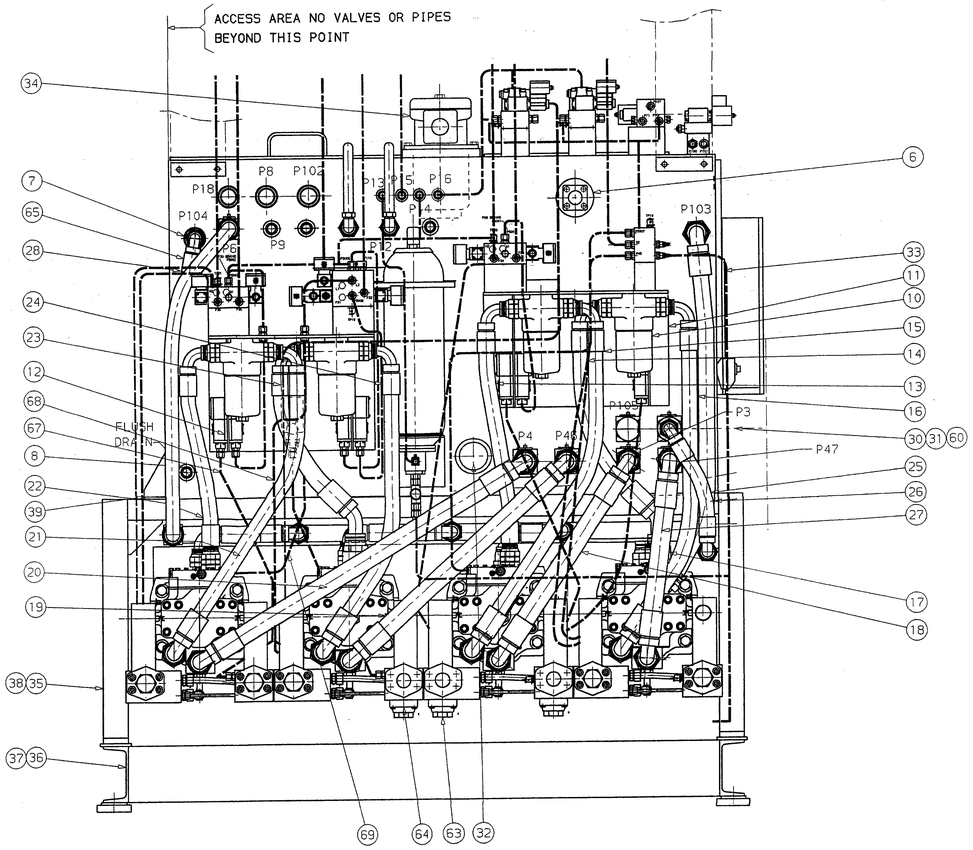

ITEM No.	QTY.	DESCRIPTION	DRG/IDEN NO.	TOTAL WGHT KG	REMARKS
1	1	AIR BREATHER	BLF		
2	1	RESERVOIR	012-02324		
3	1	RESERVOIR COVER	PART OF ITEM 2		
4	1	RESERVOIR COVER	PART OF ITEM 2		
5		COVER BOLTS	M10x30 S.S.		
6	1	LEVEL SWITCH	FS4257/5D/250/S2/B0F/680		
7	1	PLUG	BF062	2"	
8	2	SELF SEALING COUPLING	-		
9	1	THERMOSTAT	41991203221212160150		
10	4	PRESSURE FILTER	LFBNHC330G10B1.0/BYP		
11	1	FILTER BRACKET	BF063		
12	1	FILTER BRACKET	BF063		
13	1	HOSE ASSEMBLY	1 1/4"90°xSTx1000LG		
14	1	HOSE ASSEMBLY	1 1/4"45°x90°AT 180øx1050LG		
15	1	HOSE ASSEMBLY	1 1/4"90°x90°AT 180øx1500LG		
16	1	HOSE ASSEMBLY	1 1/4"90°x90°AT 90øx1400LG		
17	1	HOSE ASSEMBLY	2"90°xSTx1200		
18	1	HOSE ASSEMBLY	2"45°x90°x1280		
19	1	HOSE ASSEMBLY	2"45°x90°x1480		
20	1	HOSE ASSEMBLY	2"90°x45°x1680		
21	1	HOSE ASSEMBLY	1 1/4"90°x90° AT 90°x1250LG		
22	1	HOSE ASSEMBLY	1 1/4"90°xSTx860LG		
23	1	HOSE ASSEMBLY	1 1/4"90°xSTx880LG		
24	1	HOSE ASSEMBLY	1 1/4"90°x90°x1240LG		
25	1	HOSE ASSEMBLY	1"90°x90°x530LG		
26	1	HOSE ASSEMBLY	1 1/4"90°x90°x1320LG		
27	1	HOSE ASSEMBLY	1 1/4"90°x90°x620LG		
28	1	HOSE ASSEMBLY	1 1/4"STxSTx1310LG		
29			-		
30	1	PIPE COUPLING	-		
31	1	STEEL PIPE	-		
32	1	HEATER	FPSLT020 2KW		
33	2	SIGHT GLASS	FSA 257		
34	1	RETURN FILTER	RFBNHC950F10B1.0/BYP		
35	1	RESERVOIR SUPPORT	97-15-116	205	
36	1	GEARBOX BEDPLATE	97-15-104	283	
37		BEDPLATE BOLTS	-		
38	8	SUPPORT BOLTS	-		M24
39	16	RESERVOIR BOLTS	BF065		M16x40
40	1	SAE FLANCE	2"SAE 3000		
41	1	PIPE COUPLING	-		
42	1	PIPE	-		
43	1	ELBOW	25mm EQUAL BF047		
44	1	ADAPTOR	1"MM BF042		
45	4	PIPE EXTENSION	-		
46	5	ISOLATING VALVE	2" 108008		
47		SAE FLANGE	-		
48		HOSE ASSEMBLY	1 1/4"90°x90°AT90°x930LG		
49		ELBOW	-		
50		ADAPTOR	-		
51		PIPE	-		
52		PIPE COUPLING	-		
53		SAE FLANGE	2"SAE 6000 BF004		
54		UNLOADING VALVE	RSU06-591-15A1		
55		PIPE COUPLING	-		
56					
57			-		
58		FILTER BRACKET	-		
59		FILTER	MDF BNHC160G10B1.0/BYP		
60		CHECK VALVE	CSV06-321-A1		
61		ISOLATING VALVE	108007		
62		ISOLATING VALVE	108008		
63	8	PLUG	-		
64	8	SAE 6000 FLANGE	BF018		
65		HOSE ASSEMBLY	2"45°x90°x1400LG		
66		HOSE ASSEMBLY	-		
67		HOSE ASSEMBLY	1/4"45°x90°x1340		
68		HOSE ASSEMBLY	1/4"90°x5Tx1580LG		
69		HOSE ASSEMBLY	1/4"90°x90°x1580LG		
70					
71					

REV	DESCRIPTION	BY/DATE	REV	DESCRIPTION	BY/DATE
A0					

PURCHASER/PROJECT NAME:	BRASPETRO OIL SERVICES COMPANY BRASOIL FPSO-VIDAL DE NEGREIROS
PURCHASE ORDER/CONTRACT No	P.O. VN. GSU-005A/95
PURCHASE REQUISITION No	RM-3010.31-2120-631-IVI-001
EQUIPMENT ITEM No.	GD 526-cc02A
EQUIPMENT DESIGNATION	DECK CRANES

TOLERANCE APPLICATION
SURFACE SYMBOLS TO BS.308-ISO/R1302
ALL SPECIAL TOLERANCES SHOWN TO BE ADHERED TO.
SYMBOL 'G' DENOTES LINEAR SIZES TO BE MAINTAINED.
ALL OTHER DIMENSIONS TO BE WITHIN ±0.5mm UNLESS OTHERWISE STATED.

MATERIAL --------
PATT.No /_
WEIGHT Kgs
ROUGH -.---
RINISHED -.---

INDUSTRIAL POWER GROUP
CLARKE CHAPMAN MARINE

TITLE
POWER PACK ASSEMBLY

DRAWN	M.M.	DATE	8-5-97	DRAWING No.	REV
CHECKED	LDH	SCALE	1 7.5	CR346-30	0

THIRD ANGLE PROJECTION USED ON THIS DRAWING UNLESS NOTED OTHERWISE BY ARROWS

DO NOT SCALE - IF IN DOUBT ASK

THIS DRAWING IS THE PROPERTY OF CLARKE CHAPMAN LTD. AND IS DISCLOSED ON THE UNDERSTANDING THAT IT IS KEPT STRICTLY CONFIDENTIAL. IT MUST NOT BE COPIED OR OTHERWISE DISCLOSED WITHOUT PRIOR WRITTEN CONSENT OF CLARKE CHAPMAN LTD.

ITEM No.	QTY.	DESCRIPTION	DRG/IDEN NO.	TOTAL WEIGHT Kgs	REMARKS
1	11	PIPE	BF058	-	ø10mmOD
2	1	PIPE	-	-	ø12mmOD
3	-	MALE MALE ADAPTOR	BF007	-	3/8"x3/8"
4	-	MALE STUD COUPLING	BF057	-	3/8"x10mm
5	-	TEE	BF015	-	10mm
6	-	HOSE ASSEMBLY	-	-	SEE HOSE CHART
7	-	HOSE ASSEMBLY	-	-	SEE HOSE CHART
8	-	HOSE ASSEMBLY	-	-	SEE HOSE CHART
9	-	HOSE ASSEMBLY	-	-	SEE HOSE CHART
10	-	HOSE ASSEMBLY	-	-	SEE HOSE CHART
11	-	HOSE ASSEMBLY	-	-	SEE HOSE CHART
12	-	HOSE ASSEMBLY	-	-	SEE HOSE CHART
13	-	HOSE ASSEMBLY	-	-	SEE HOSE CHART
14	-	HOSE ASSEMBLY	-	-	SEE HOSE CHART
15	-	HOSE ASSEMBLY	-	-	SEE HOSE CHART
16	-	HOSE ASSEMBLY	-	-	SEE HOSE CHART
17	-	HOSE ASSEMBLY	-	-	SEE HOSE CHART
18	-	HOSE ASSEMBLY	-	-	SEE HOSE CHART
19	-	HOSE ASSEMBLY	-	-	SEE HOSE CHART
20	-	HOSE ASSEMBLY	-	-	SEE HOSE CHART
21	-	HOSE ASSEMBLY	-	-	SEE HOSE CHART
22	-	HOSE ASSEMBLY	-	-	SEE HOSE CHART
23	-	HOSE ASSEMBLY	-	-	SEE HOSE CHART
24	-	HOSE ASSEMBLY	-	-	SEE HOSE CHART
25	-	HOSE ASSEMBLY	-	-	SEE HOSE CHART
26	-	HOSE ASSEMBLY	-	-	SEE HOSE CHART
27	-	HOSE ASSEMBLY	-	-	SEE HOSE CHART
28	-	HOSE ASSEMBLY	-	-	SEE HOSE CHART
29	-	HOSE ASSEMBLY	-	-	SEE HOSE CHART
30	-	HOSE ASSEMBLY	-	-	SEE HOSE CHART
31	-	HOSE ASSEMBLY	-	-	SEE HOSE CHART
32	-	HOSE ASSEMBLY	-	-	SEE HOSE CHART
33	-	HOSE ASSEMBLY	-	-	SEE HOSE CHART
-					
-					
-					
-					

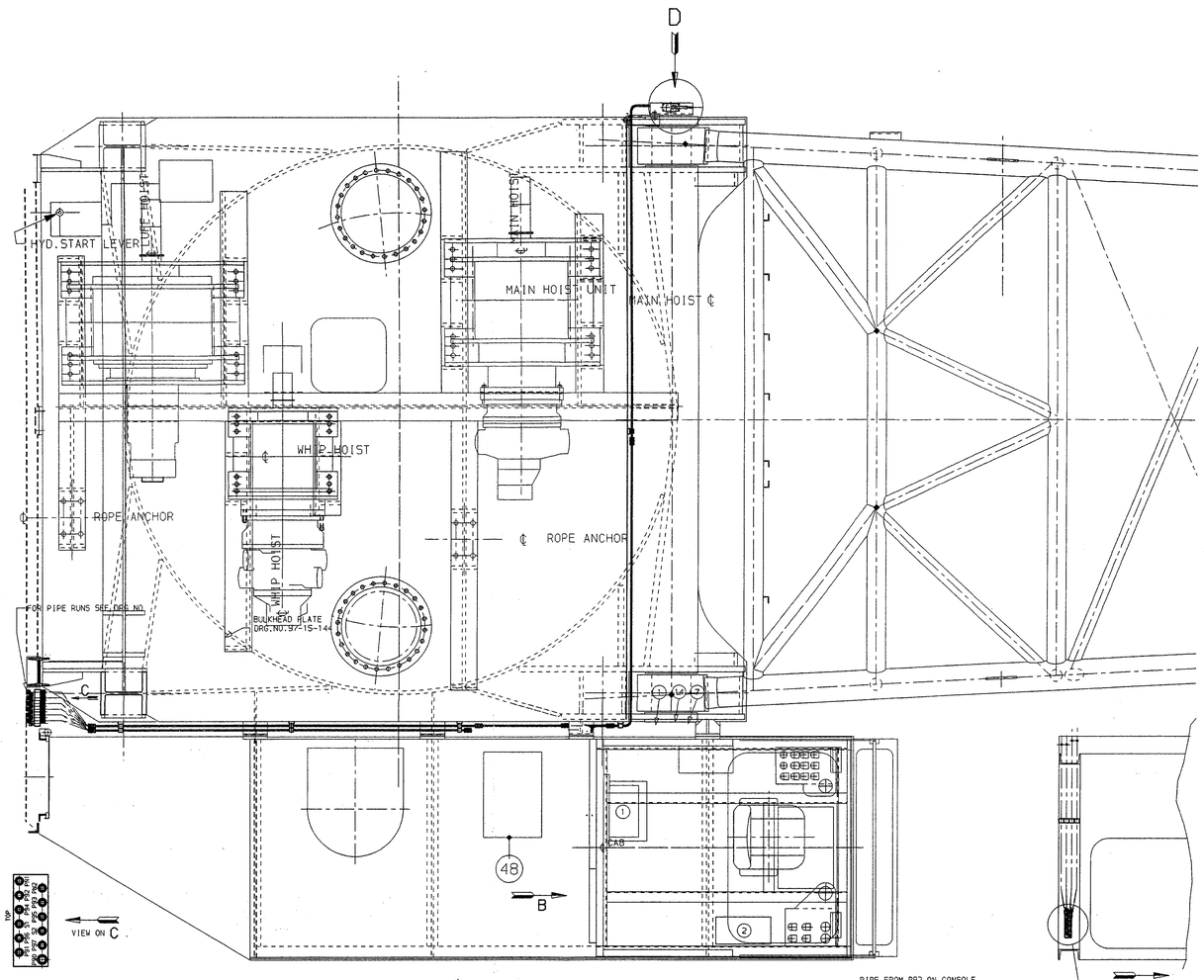

PIPE FROM P92 ON CONSOLE

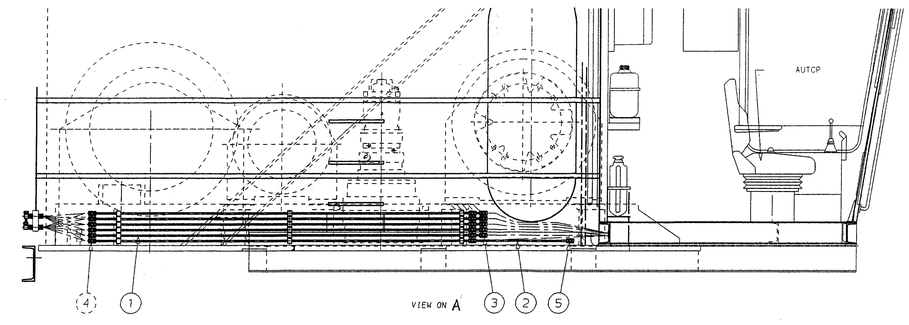

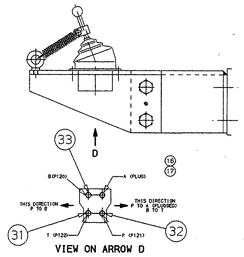

VIEW ON ARROW D

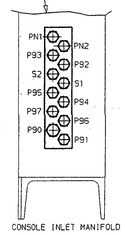

CONSOLE INLET MANIFOLD

FAVOR CONSULTAR NO SISTEMA, POIS PODERÁ EXISTIR REVISÕES MAIS ATUALIZADAS.

PURCHASER/PROJECT NAME:	BRASPETRO OIL SERVICES COMPANY BRASOIL FPSO-VIDAL DE NEGREIROS
PURCHASE ORDER/CONTRACT No	P.O. VN. GSU-005A/96
PURCHASE REQUISITION No	RM-3010.31-21200-631-IVI-001
EQUIPMENT ITEM No.	GD 526 002 A
EQUIPMENT DESIGNATION	DECK CRANES

CONTROL PIPE LINE DIAGRAM

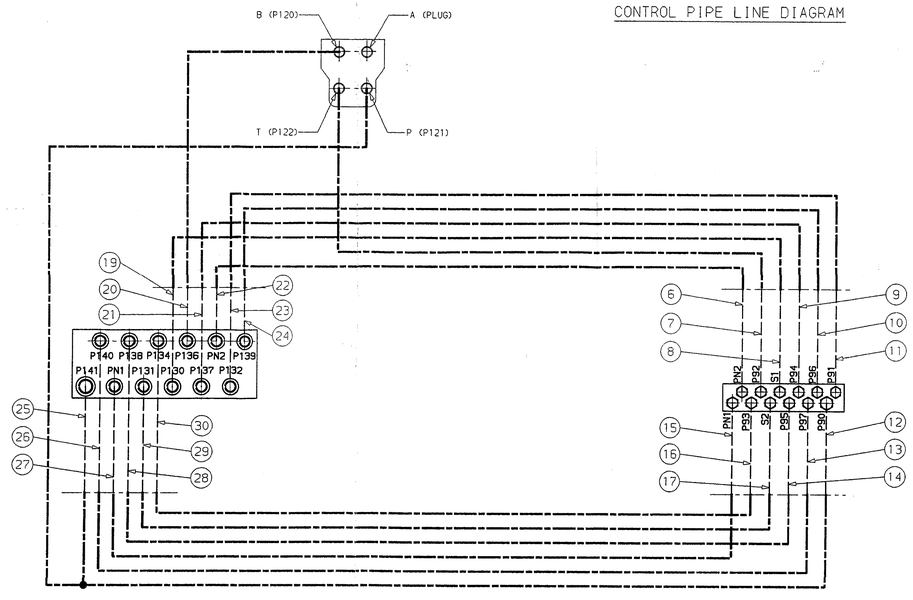

REV	DESCRIPTION	BY/DATE	REV	DESCRIPTION	BY/DATE

TOLERANCE APPLICATION
SURFACE SYMBOLS TO BS.308-ISO/R1302
ALL SPECIAL TOLERANCES SHOWN TO BE ADHERED TO.
SYMBOL 'S' DENOTES LINEAR SIZES TO BE MAINTAINED.
ALL OTHER DIMENSIONS TO BE WITHIN ±0.5mm UNLESS OTHERWISE STATED.

MATERIAL ----------
PATT.No -/-
WEIGHT Kgs
ROUGH -.--
FINISHED -.--

INDUSTRIAL POWER GROUP
CLARKE CHAPMAN MARINE

TITLE
CONTROL PIPE ASSEMBLY

DRAWN	MM	DATE	2-10-97	DRAWING No.	REV
CHECKED	LDH	SCALE	1:15	CR346-33	0

THIRD ANGLE PROJECTION USED ON THIS DRAWING UNLESS NOTED OTHERWISE BY ARROWS

DO NOT SCALE - IF IN DOUBT ASK

THIS DRAWING IS THE PROPERTY OF CLARKE CHAPMAN LTD. AND IS DISCLOSED ON THE UNDERSTANDING THAT IT IS KEPT STRICTLY CONFIDENTIAL. IT MUST NOT BE COPIED OR OTHERWISE DISCLOSED WITHOUT PRIOR WRITTEN CONSENT OF CLARKE CHAPMAN LTD.

FAVOR CONSULTAR NO SISTEMA, POIS PODERÁ EXISTIR REVISÕES MAIS ATUALIZADAS.

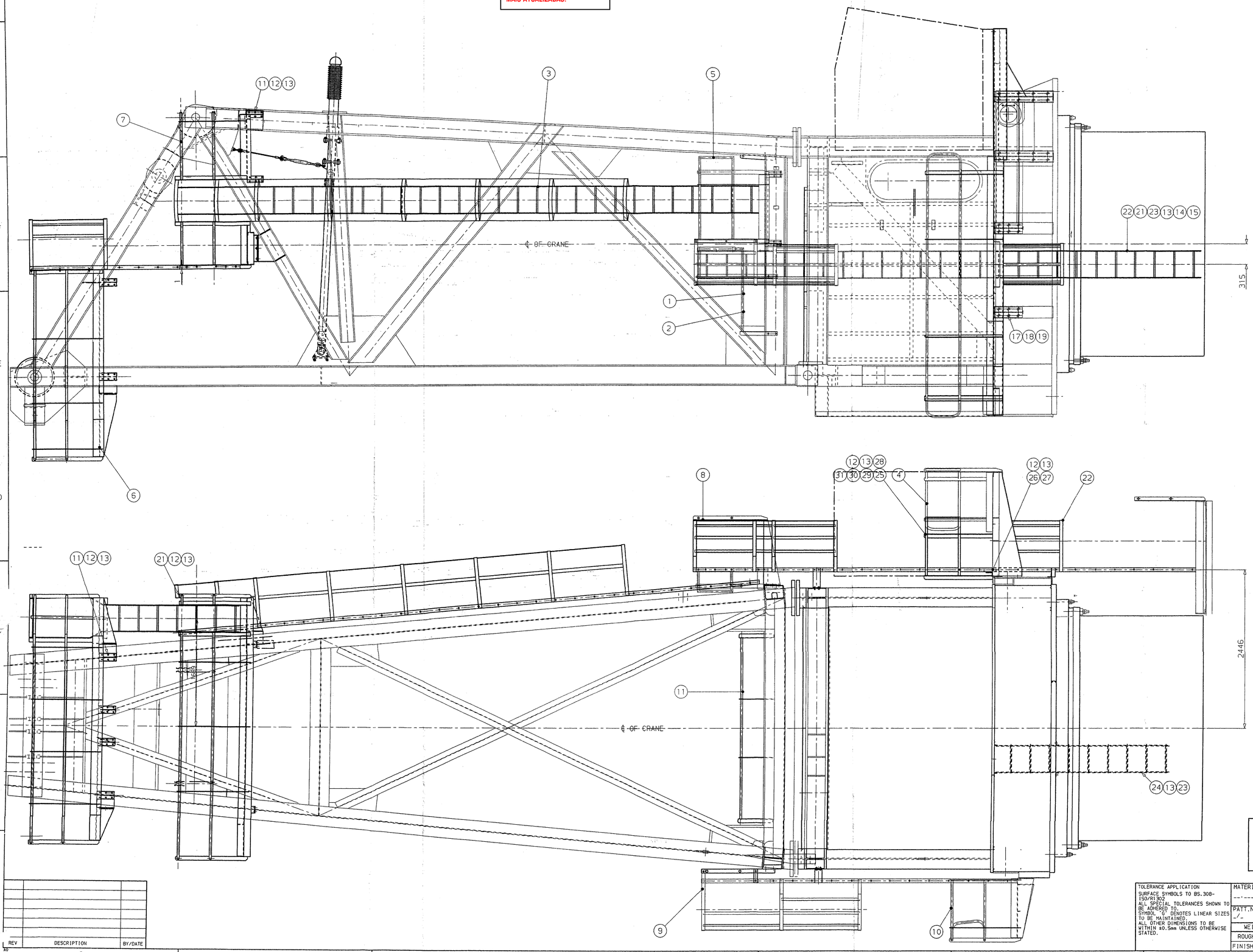

REF No.	DESCRIPTION	DRG/IDEN No.	REV	No/SET
1	HANDRAIL-M/C HOUSE	97/15/121	0	1
2	HANDRAIL-MAST	97/15/122	0	1
3	LADDER	97/15/123	0	1
4	CAB ACCESS PLATFORM	97/15/128	0	1
5	ACCESS PLATFORM	97/15/132	0	1
6	ACCESS PLATFORM	97/15/133	0	1
7	ACCESS PLATFORM	97/15/134	0	1
8	ACCESS LADDER	97/15/135	0	1
9	ACCESS LADDER	97/15/136	0	1
10	JIB ACCESS PLATFORM	97/15/162	0	1
11	M 16 BOLT x 45			96
12	M 16 FULL NUT			143
13	M 16 WASHER			149
14	M 20 BOLT x 40			9
15	M 20 FULL NUT			9
16	M 20 WASHER			9
17	M 24 BOLT x 70			28
18	M 24 FULL NUT			28
19	M 24 WASHER			28
20	M 16 BOLT x 35			17
21	M 16 BOLT x 40			20
22	ACCESS LADDER	97/15/124	0	1
23	M 16 BOLT x 25			6
24	ACCESS LADDER	97/15/194		1
25	GUARD RAIL	97/15/276		1
26	LADDER CLEAT	97/15/280		2
27	M 16 X 50 BOLT			2
28	M 16 X 30 BOLT			8
29	M 12 X 50 BOLT			1
30	M 12 FULL NUT			1
31	M 12 WASHER			1
32				

REV	DESCRIPTION	BY/DATE

PURCHASER/PROJECT NAME:	BRASPETRO OIL SERVICES COMPANY BRASOIL FPSO-VIDAL DE NEGREIROS
PURCHASE ORDER/CONTRACT No	P.O. VN. GSU-005A/96
PURCHASE REQUISITION No	RM-3010.31-21200-631-IVI-001
EQUIPMENT ITEM No.	GD 526003
EQUIPMENT DESIGNATION	DECK CRANES

TOLERANCE APPLICATION
SURFACE SYMBOLS TO BS.308-ISO/R1302
ALL SPECIAL TOLERANCES SHOWN TO BE ADHERED TO.
SYMBOL 'G' DENOTES LINEAR SIZES TO BE MAINTAINED.
ALL OTHER DIMENSIONS TO BE WITHIN ±0.5mm UNLESS OTHERWISE STATED.

MATERIAL --/------/--

PATT.No -/-

WEIGHT Kgs

ROUGH -.---

FINISHED 3331

INDUSTRIAL POWER GROUP

CLARKE CHAPMAN MARINE

TITLE

ACCESS LADDERS & PLATFORMS ARRANGEMENT

DRAWN	AMB	DATE	23/6/97
CHECKED	HJP	SCALE	-.-

DRAWING No. XCR346-11

REV 0

THIRD ANGLE PROJECTION USED ON THIS DRAWING UNLESS NOTED OTHERWISE BY ARROWS

DO NOT SCALE - IF IN DOUBT ASK

THIS DRAWING IS THE PROPERTY OF CLARKE CHAPMAN LTD. AND IS DISCLOSED ON THE UNDERSTANDING THAT IT IS KEPT STRICTLY CONFIDENTIAL. IT MUST NOT BE COPIED OR OTHERWISE DISCLOSED WITHOUT PRIOR WRITTEN CONSENT OF CLARKE CHAPMAN LTD.

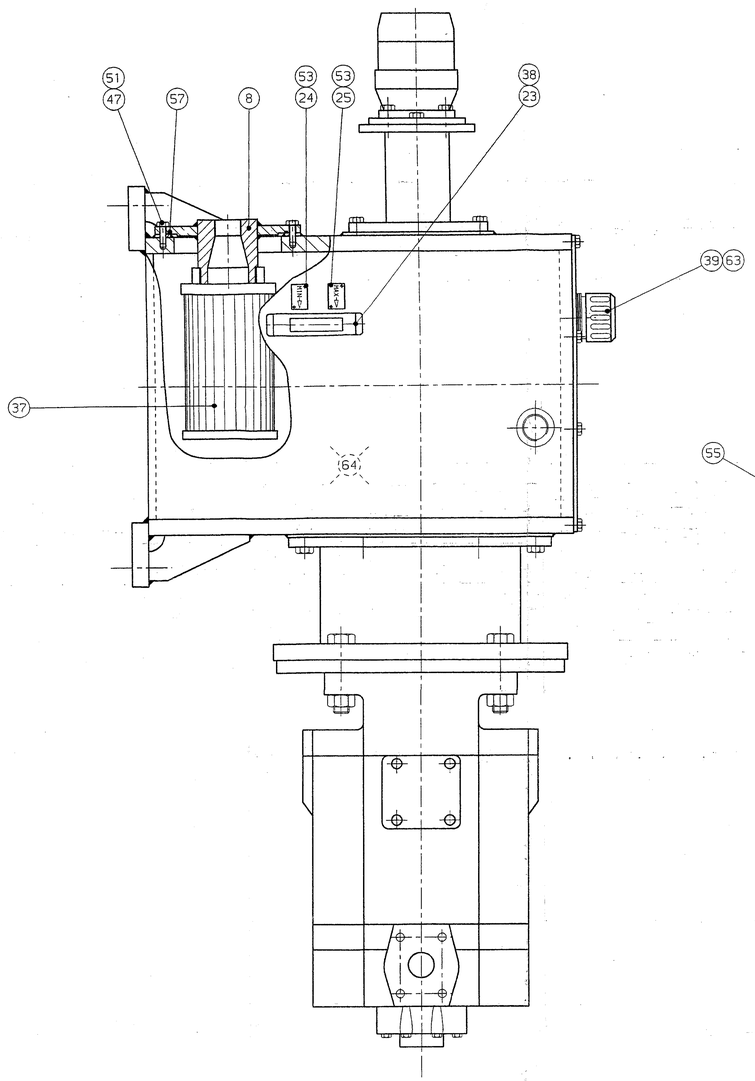

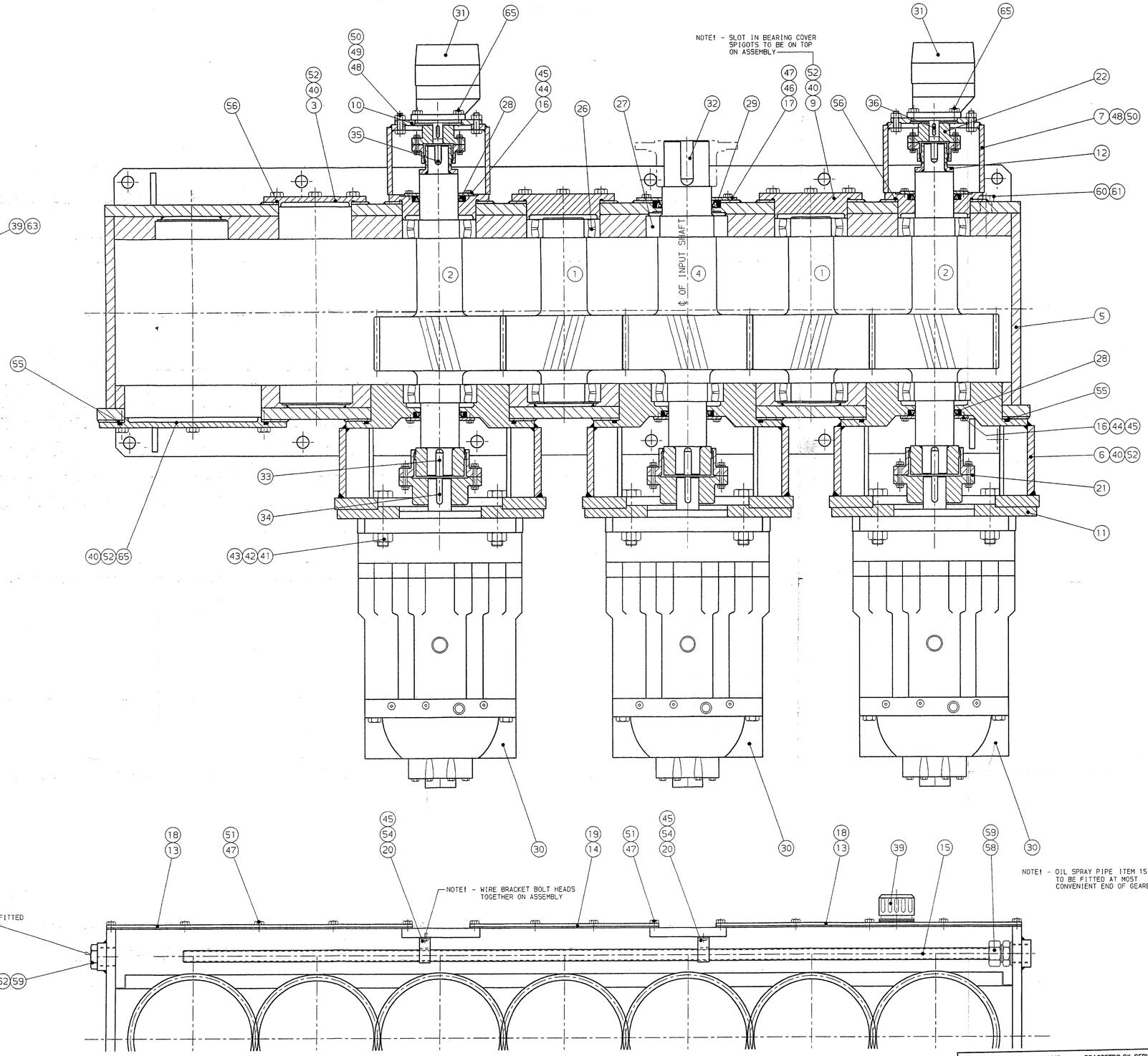

FAVOR CONSULTAR NO SISTEMA, POIS PODERÁ EXISTIR REVISÕES MAIS ATUALIZADAS.

REV	DESCRIPTION	BY/DATE	REV	DESCRIPTION	BY/DATE
B	AS BUILT REVISIONS	MCA 21-08-97			
A	GENERAL REVISIONS	MCA 27-04-97			

TOLERANCE APPLICATION
SURFACE SYMBOLS TO BS.308-ISO/R1302
ALL SPECIAL TOLERANCES SHOWN TO BE ADHERED TO.
SYMBOL 'G' DENOTES LINEAR SIZES TO BE MAINTAINED.
ALL OTHER DIMENSIONS TO BE WITHIN ±0.5mm UNLESS OTHERWISE STATED.

MATERIAL --.-----.--
PATT.No -/-
WEIGHT Kgs
ROUGH --.--
FINISHED --.--

INDUSTRIAL POWER GROUP
CLARKE CHAPMAN MARINE

TITLE PUMP DRIVE GEARBOX ASSEMBLY SHEET 1 OF 2

DRAWN	MCA	DATE	08-04-97
CHECKED		SCALE	3:10

DRAWING No. CR347-18 SHT1 REV B

PURCHASER/PROJECT NAME:	BRASPETRO OIL SERVICES COMPANY BRASOIL FPSO-VIDAL DE NEGREIROS
PURCHASE ORDER/CONTRACT No	P.O. VN. GSU-005A/96
PURCHASE REQUISITION No	RM-3010.31-21200-631-IVI-001
EQUIPMENT ITEM No.	GD 526 003
EQUIPMENT DESIGNATION	DECK CRANES

THIRD ANGLE PROJECTION USED ON THIS DRAWING UNLESS NOTED OTHERWISE BY ARROWS

DO NOT SCALE - IF IN DOUBT ASK

THIS DRAWING IS THE PROPERTY OF CLARKE CHAPMAN LTD. AND IS DISCLOSED ON THE UNDERSTANDING THAT IT IS KEPT STRICTLY CONFIDENTIAL. IT MUST NOT BE COPIED OR OTHERWISE DISCLOSED WITHOUT PRIOR WRITTEN CONSENT OF CLARKE CHAPMAN LTD.

LUFF MOTOR

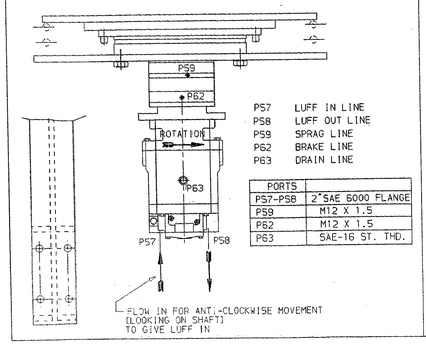

P57	LUFF IN LINE
P58	LUFF OUT LINE
P59	SPRAG LINE
P62	BRAKE LINE
P63	DRAIN LINE

PORTS	
P57-P58	2"SAE 6000 FLANGE
P59	M12 X 1.5
P62	M12 X 1.5
P63	SAE-16 ST. THD.

WHIP HOIST MOTOR

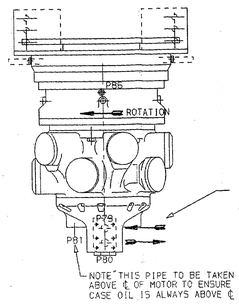

P79	HEAVE LINE
P80	VEER LINE
P81	DRAIN LINE
P86	BRAKE LINE

FLOW IN FOR CLOCKWISE MOVEMENT (LOOKING ON SHAFT) TO GIVE WINCH HOIST

PORTS	
P79-P80	11/2 BSPF
P81	3/4-16UNF-2B
P86	1/2 BSPF

MAIN HOIST MOTOR

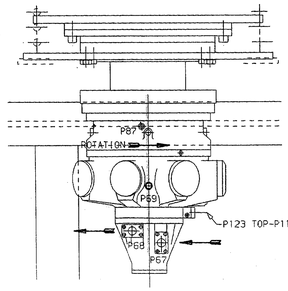

FLOW IN FOR ANTI-CLOCKWISE MOVEMENT (LOOKING ON SHAFT) TO GIVE WINCH HOIST

P67	HEAVE LINE
P68	VEER LINE
P69	DRAIN LINE
P87	BRAKE LINE
P119	HIGH SPEED
P123	LOW SPEED

PORTS	
P67-P68	11/2 SAE CODE 62 4 BOLT FLANGE
P69	3/4-16 UNF-2B
P87	1/2 BSPF
P119-P123	1/4 BSPF

SOLENOID DE-ENERGIZED :-NORMAL OPERATION

LOW SPEED [P108-P123]

SOLENOID ENERGIZED :-LIGHT LINE

HIGH SPEED [P109-P119]

SLEW MOTOR

FLOW IN FOR CLOCKWISE MOVEMENT (LOOKING ON SHAFT END) TO GIVE SLEW RIGHT (CONN P53-P51)PORT A

PORT B (CONN P50-P52)

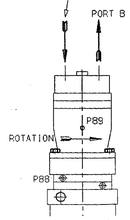

FLOW IN PORT A CLOCKWISE MOVEMENT (LOOKING ON SHAFT) TO GIVE SLEW RIGHT

P50-P52	SLEW LEFT
P51-P53	SLEW RIGHT
P88	BRAKE LINE
P89	DRAIN LINE

PORTS	
P50-P51-P52-P53	SAE 11/2 6000 FLANGE
P88	M12 X 1.5
P89	SAE 16 ST.THD.

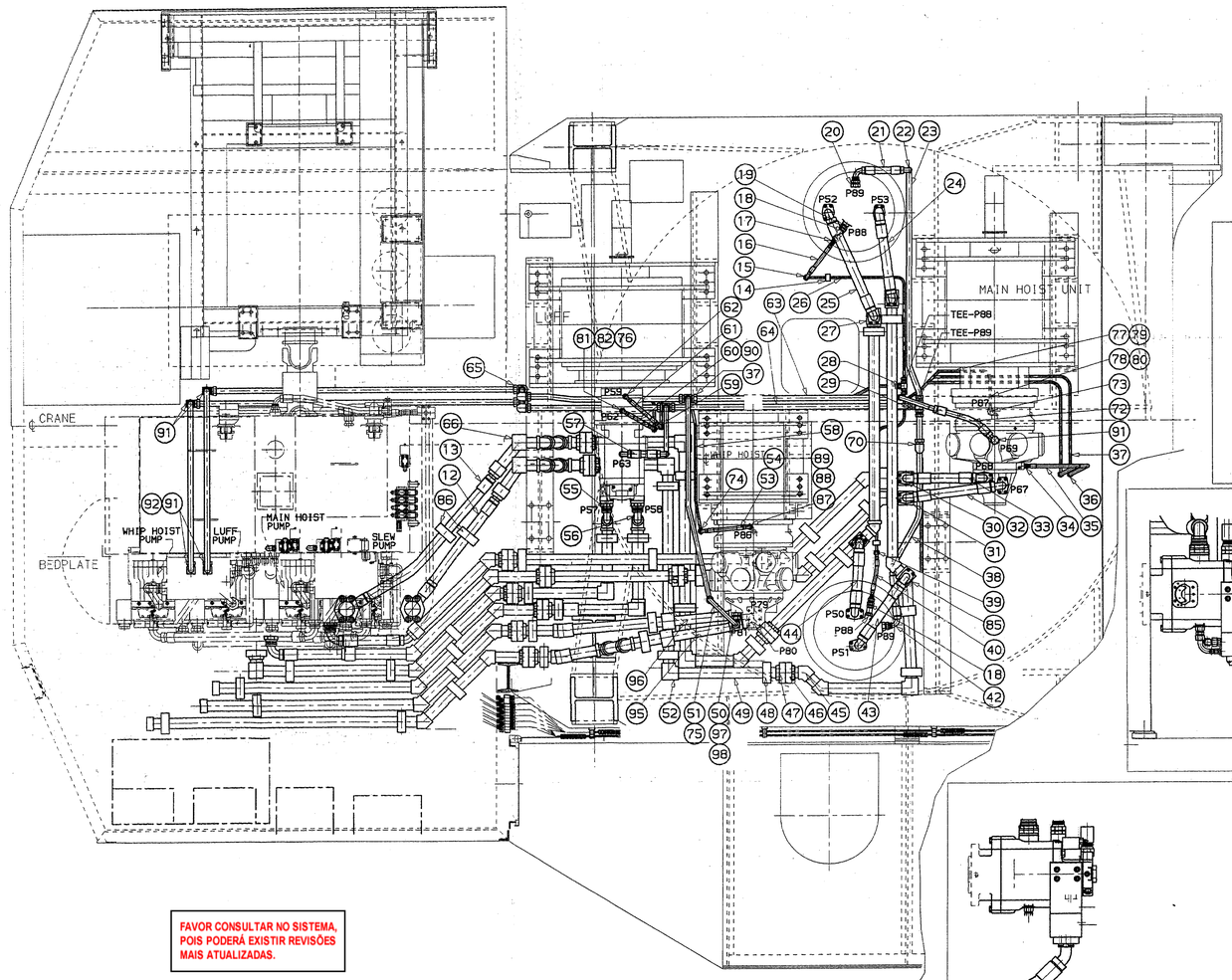

FAVOR CONSULTAR NO SISTEMA, POIS PODERÁ EXISTIR REVISÕES MAIS ATUALIZADAS.

WHIP HOIST PUMP HOSES

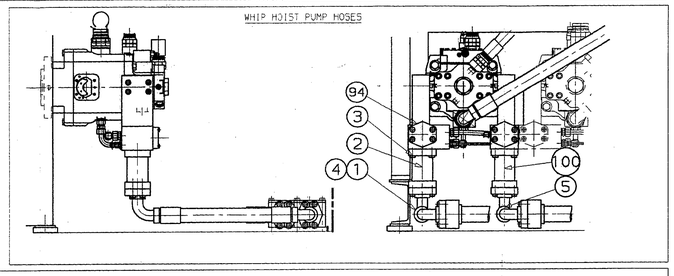

LUFF PUMP HOSES

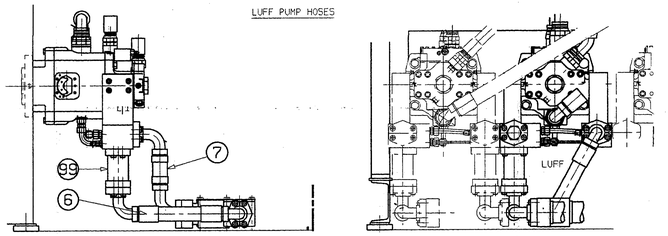

MAIN HOIST PUMP PIPES

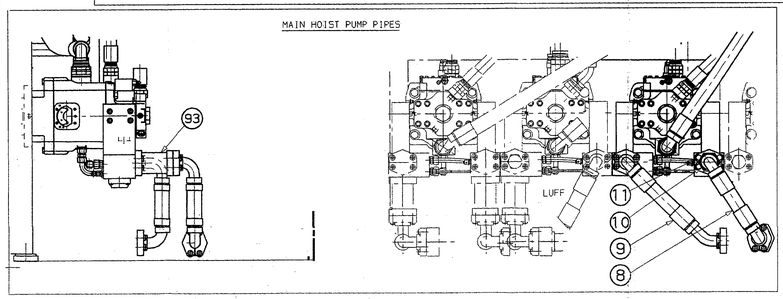

SLEW PUMP PIPES

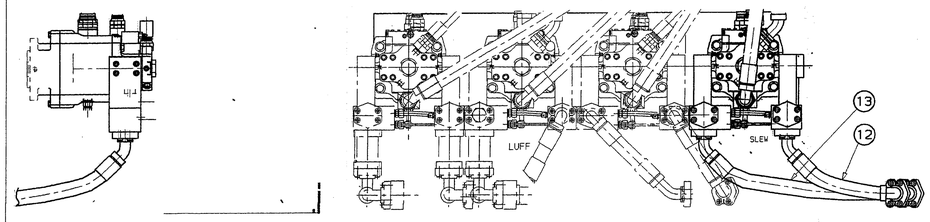

ITEM No.	QTY.	DESCRIPTION	DRG/IDEN NO.	TOTAL WEIGHT KG	REMARKS
1	1	FLEXIBLE HOSE			SEE HOSE CHART
2		PIPE ADAPTOR	2"SAE 6000		BF001
3		BOLTS	BF002		3/4 UNC X 2 3/4 LONG
4		BOLTS	BF003		M20x70
5	1	FLEXIBLE HOSE			SEE HOSE CHART
6	1	FLEXIBLE HOSE			SEE HOSE CHART
7	1	FLEXIBLE HOSE			SEE HOSE CHART
8	1	FLEXIBLE HOSE			SEE HOSE CHART
9	1	FLEXIBLE HOSE			SEE HOSE CHART
10		SAE FLANGE	BF004		2"BSP SAE 6000
11		BOLTS FOR ITEM 10	BF002		3/4 UNC X 2 3/4 LONG
12	1	FLEXIBLE HOSE			SEE HOSE CHART
13	1	FLEXIBLE HOSE			SEE HOSE CHART
14		PIPE CLAMP	BF005		
15		ADAPTOR	BF006		10mmS.PIPEx3/8"BSP
16	1	FLEXIBLE HOSE			SEE HOSE CHART
17		ADAPTOR	BF007		3/8"M/M
18		QUICK RELEASE COUPLING	BF008		3/8"
19		ADAPTOR	BF009		M12x3/8M BSP
20		ADAPTOR	BF010		SAE 16x1 1/4M BSP
21	1	FLEXIBLE HOSE			SEE HOSE CHART
22		ADAPTOR	BF011		42mm MSCx1 1/4"BSP
23		STEEL PIPE	BF012		42MM
24	1	FLEXIBLE HOSE			SEE HOSE CHART
25	1	FLEXIBLE HOSE			SEE HOSE CHART
26		STEEL PIPE	BF013		10MM
27		JUNCTION BLOCK	BF014		1 1/2"
28		TEE PIECE	BF015		10MM S/P TEE
29		TEE PIECE	BF016		42MM S/P TEE
30		JUNCTION BLOCK	BF014		1 1/2"
31		FLANGE BOLTS			
32	1	FLEXIBLE HOSE			SEE HOSE CHART
33	1	FLEXIBLE HOSE			SEE HOSE CHART
34		ADAPTOR	BF0017		1/4"x3/8"BSP
35		FLEXIBLE HOSE			SEE HOSE CHART
36		ADAPTOR	BF006		
37		STEEL PIPE	BF013		10MM
38		STEEL PIPE	BF012		42MM
39		ADAPTOR	BF033		10MM M x 3/8"BSP M
40	1	FLEXIBLE HOSE			SEE HOSE CHART
41		PIPE CLAMP			
42	1	FLEXIBLE HOSE			SEE HOSE CHART
43	1	FLEXIBLE HOSE			SEE HOSE CHART
44	1	FLEXIBLE HOSE			SEE HOSE CHART
45		45 ELBOW	BF034		76.1 OD x 45°
46		SAE FLANGE	BF018		3"6000
47		SAE FLANGE	BF018		3"6000
48		PIPE CLAMP	BF019		76MM STAUFF CLAMP
49		STEEL PIPE	BF035		76.1 OD
50		ADAPTOR	BF020		3 UNF Mx1"BSP M
51	1	FLEXIBLE HOSE			SEE HOSE CHART
52		90 ELBOW	BF021		90°x76.1MM OD
53	1	FLEXIBLE HOSE			SEE HOSE CHART
54		ADAPTOR	BF022		1/2"BSPx3/8"BSP
55	1	FLEXIBLE HOSE			SEE HOSE CHART
56	1	FLEXIBLE HOSE			SEE HOSE CHART
57	1	FLEXIBLE HOSE			SEE HOSE CHART
58		STEEL PIPE	BF036		16MM
59		ADAPTOR	BF033		10MMx3/8"BSP M
60	1	FLEXIBLE HOSE			SEE HOSE CHART
61	1	FLEXIBLE HOSE			SEE HOSE CHART
62		ADAPTOR	BF009		M12x3/8"BSP M
63		STEEL PIPE	BF012		42MM
64		STEEL PIPE	BF012		42MM
65		90 ELBOW	BF023		90°x42MM
66		90 ELBOW	BF021		90°x76.1MM
67	1	FLEXIBLE HOSE			SEE HOSE CHART
68	1	FLEXIBLE HOSE			SEE HOSE CHART
69		ADAPTOR	BF024		SAE 20Mx1 1/4"BSP M
70		90 ELBOW	BF023		90°x42MM
71		ADAPTOR	BF020		3/4UNF Mx1"BSP M
72	1	FLEXIBLE HOSE			SEE HOSE CHART
73		ADAPTOR	BF025		42MM S/P M x1"BSP M
74		ADAPTOR	BF026		16MM S/P Mx3/8"BSP M
75		ADAPTOR	BF025		42MM S/P M x1"BSP M
76		ADAPTOR	BF009		M12 Mx3/8"BSP M
77		STEEL PIPE	BF036		16MM
78	1	FLEXIBLE HOSE			SEE HOSE CHART
79		ADAPTOR	BF026		16MM SP Mx3/8"BSP M
80		ADAPTOR	BF022		1/2"BSP Mx3/8"BSP M
81		QUICK RELEASE COUPLING	BF008		3/8"
82		ADAPTOR	BF007		3/8"BSP Mx3/8"BSP M
83		ADAPTOR DRAIN	BF037		42MMx1 1/4"BSP M
84		TEE PIECE	BF027		42 M/M
85	2	TEE PIECE	BF028		76.1MM OD
86	2	STAUFF CLAMP	BF019		STAUFF 76 M/M
87		BRAKE ADAPTOR	BF022		1/2"BSP Mx3/8"BSP M
88		QUICK RELEASE COUPLING	BF008		3/8"
89		ADAPTOR M/M	BF007		3/8"BSP Mx3/8"BSP M
90		ADAPTOR M/M	BF029		3/8"BSP Mx3/8"BSP M
91	6	90 ELBOW	BF023		42MM 90°
92	2	ADAPTOR	BF030		1 1/2"BSP Mx42MM MSC M
93	1	ADAPTOR	BF001		2"x6000MM
94	8	BLANKING FLANGE	BF031		2"SAE 6000
95	1	FLEXIBLE HOSE			SEE HOSE CHART
96	1	FLEXIBLE HOSE			SEE HOSE CHART
97		ADAPTOR PLATE	BF037		6 BOLT 75048
98	2	ADAPTOR M/M	BF032		1 1/2"BSPMx1 1/2"BSPM
99	1	PIPE ADAPTOR			2"SAE 6000
100	1	PIPE ADAPTOR			2"SAE 6000

PURCHASER/PROJECT NAME:	BRASPETRO OIL SERVICES COMPANY BRASOIL FPSO-VIDAL DE NEGREIROS
PURCHASE ORDER/CONTRACT No	P.O. VN. GSU-005A/98
PURCHASE REQUISITION No	RM-3010.31-21200-631-IVI-001
EQUIPMENT ITEM No.	GD 526 002 A
EQUIPMENT DESIGNATION	DECK CRANES

REV	DESCRIPTION	BY/DATE	REV	DESCRIPTION	BY/DATE

TOLERANCE APPLICATION
SURFACE SYMBOLS TO BS.308-ISO/R1302
ALL SPECIAL TOLERANCES SHOWN TO BE ADHERED TO.
SYMBOL 'S' DENOTES LINEAR SIZES TO BE MAINTAINED.
ALL OTHER DIMENSIONS TO BE WITHIN ±0.5mm UNLESS OTHERWISE STATED.

MATERIAL ---------
PATT.No -/-
WEIGHT Kgs
ROUGH -.--
FINISHED -.--

INDUSTRIAL POWER GROUP
CLARKE CHAPMAN MARINE

TITLE
PIPE ASSEMBLY

DRAWN	M.M.	DATE	29-7-97	DRAWING No.	REV
CHECKED	L.D.H.	SCALE	1 15	CR346-28	0

THIRD ANGLE PROJECTION USED ON THIS DRAWING UNLESS NOTED OTHERWISE BY ARROWS

DO NOT SCALE - IF IN DOUBT ASK

THIS DRAWING IS THE PROPERTY OF CLARKE CHAPMAN LTD. AND IS DISCLOSED ON THE UNDERSTANDING THAT IT IS KEPT STRICTLY CONFIDENTIAL. IT MUST NOT BE COPIED OR OTHERWISE DISCLOSED WITHOUT PRIOR WRITTEN CONSENT OF CLARKE CHAPMAN LTD.

REF No.	DESCRIPTION	DRG/IDEN No.	REV	No/SET
1	DIESEL ENGINE	CR 4837/R	-	1
2	ENGINE BEDPLATE	97/15/62	-	1
3	S/BOX BEDPLATE	97/15/104	-	1
4	RESERVOIR SUPPORT	97/15/116	-	1
5	TANK SUPPORT BRKT	97/15/177	-	4
6	EXHAUST SUPPORT	97/15/178	-	3
7	EXHAUST SUPPORT	97/15/245	-	1
8	EXHAUST EXTENSION	97/15/186	A	1
9	COVER PLATE	97/15/242	-	1
10	SHAFT ASSEMBLY	CR 4836/R	-	1
11	GUARD	97/15/246	-	1
12	M 24 BOLT x 90	-	-	10
13	M 24 BOLT	97/15/237	-	2
14	M 24 FULL NUT	-	-	46
15	M 24 WASHER	-	-	49
16	M 24 BOLT x 65	-	-	14
17	M 24 BOLT x 90	-	-	8
18	M 16 BOLT x 30	-	-	16
19	M 16 FULL NUT	-	-	16
20	M 16 WASHER	-	-	16
21	M 12 BOLT x 25	-	-	32
22	M 12 FULL NUT	-	-	24
23	M 12 WASHER	-	-	24
24	M 12 BOLT x 50	-	-	8
25	M 12 BOLT x 30	-	-	8
26	M 12 BOLT x 20	-	-	8
27	M 16 BOLT x 60	-	-	8
28	M 24 BOLT x 80	-	-	12
29	M 24 TAP BOLT x 65	-	-	3
30	M 12 FIBRE WASHER			24
31	1/2"-13 BOLT x 1"			4
32	GRATING SUPPORT	97/15/277		1
33	FORGEWELD GRATING			1
34	FILTER SUPPORT	97/15/278		1
35	M 16 BOLT X 25			10

FAVOR CONSULTAR NO SISTEMA, POIS PODERÁ EXISTIR REVISÕES MAIS ATUALIZADAS.

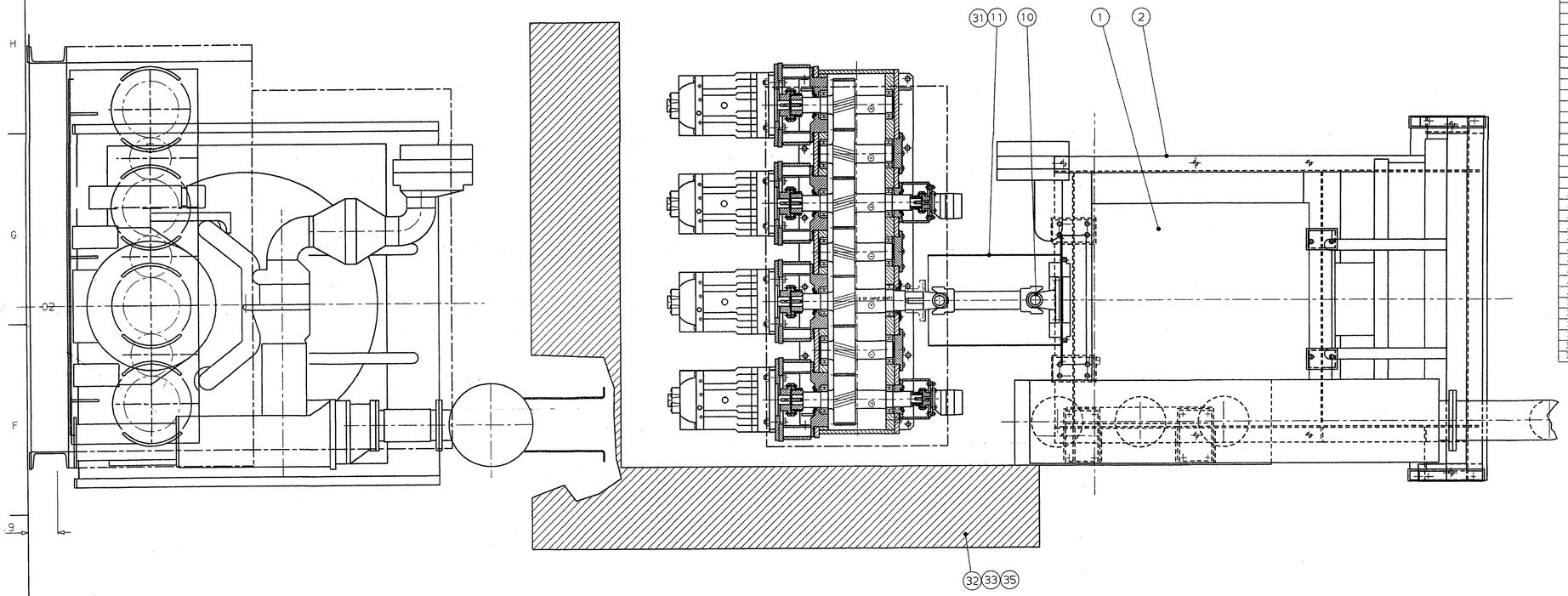

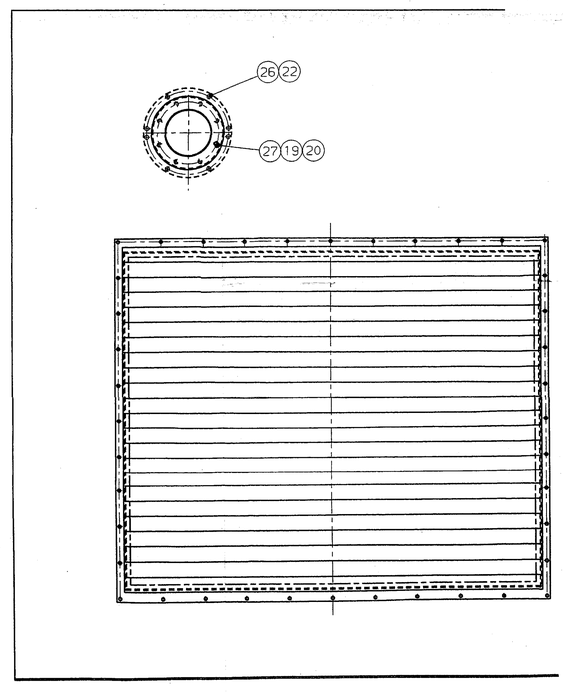

REV	DESCRIPTION	BY/DATE	REV	DESCRIPTION	BY/DATE

PURCHASER/PROJECT NAME:	BRASPETRO OIL SERVICES COMPANY BRASOIL
PURCHASE ORDER/CONTRACT No	FPSO-VIDAL DE NEGREIROS P.O. VN. GSU-005A/96
PURCHASE REQUISITION No	RM-3010.31-21200-631-IVI-001
EQUIPMENT ITEM No.	GD 526 002 B
EQUIPMENT DESIGNATION	DECK CRANES

TOLERANCE APPLICATION
SURFACE SYMBOLS TO BS.308-ISO/R1302
ALL SPECIAL TOLERANCES SHOWN TO BE ADHERED TO.
SYMBOL 'G' DENOTES LINEAR SIZES TO BE MAINTAINED.
ALL OTHER DIMENSIONS TO BE WITHIN ±0.5mm UNLESS OTHERWISE STATED.

MATERIAL --'-----'--
PATT.No -/-
WEIGHT Kgs
ROUGH --.---
FINISHED --.---

INDUSTRIAL POWER GROUP
CLARKE CHAPMAN MARINE

TITLE
DIESEL ENGINE ARRANGEMENT

DRAWN	AMB	DATE	17-7-97	DRAWING No.	REV
CHECKED	HJP	SCALE	1/15	XCR 346-17SHT1	A

THIRD ANGLE PROJECTION USED ON THIS DRAWING UNLESS NOTED OTHERWISE BY ARROWS

DO NOT SCALE - IF IN DOUBT ASK

THIS DRAWING IS THE PROPERTY OF CLARKE CHAPMAN LTD. AND IS DISCLOSED ON THE UNDERSTANDING THAT IT IS KEPT STRICTLY CONFIDENTIAL. IT MUST NOT BE COPIED OR OTHERWISE DISCLOSED WITHOUT PRIOR WRITTEN CONSENT OF CLARKE CHAPMAN LTD.

REF No.	DESCRIPTION	DRG/IDEN No.	REV	No/SET
1	AIR RECEIVER	CR4830/R	-	1
2	EMERGENCY STOP VALVE	03042802	-	1
3	NON-RETURN VALVE	S/S24	-	1
4	SHUT OFF VALVE	NVC16PC2H	-	1
5	ROTAFLOW SWIVEL JOINT	F2/25/1/1	-	1
6	SILENCER	T40C1800	-	1
7	90° ADAPTOR	102471018	-	1
8	STRAIGHT ADAPTOR	102251018-MALE	-	2
9	10mm O/D TUBE	NYLON 12	-	1
10	STRAIGHT ADAPTOR	102251038-MALE	-	2
11	TEE CONNECTOR	1" BSP F/F/M	-	1
12	TEE CONNECTOR	Z21B/16 M-M-F	-	2
13	MALE/MALE ADAPTOR	1B/8-16	-	1
14	1" PRICKED HOSE	C.T.S. ON ASSY	-	1
15	NON RETURN VALVE		-	1
16	BULKHEAD ADAPTOR	6B/16	-	1
17	LOCKNUT	LNB/16	-	1
18	1" PRICKED HOSE	C.T.S. ON ASSY	-	1
19	TEE CONNECTOR	Z11/16 M-M-F	-	1
20	1" PRICKED HOSE	C.T.S. ON ASSY	-	1
21	MALE/MALE ADAPTOR	1B/16	-	1
22	MALE/MALE ADAPTOR	1B/16-32	-	1
23	BONDED WASHER	PP45M	-	2
24	2" BSP PLUG	4B/32	-	1
25	BUSH	-	-	1
26	MALE/MALE ADAPTOR	1BN/16-8	-	1
27	1" STEEL BRAIDED HOSE	C.T.S. ON ASSY	-	1
28	MALE STUD COUPLING	A16-16MSCR	-	3
29	MALE ELBOW	A16-16MER	-	3
30	MALE/MALE ADAPTOR	1B/16	-	4
31	BONDED WASHER	PP45M	-	6
32	1" O/D PIPE	-	-	1
33	TEE CONNECTOR	Z12B/16	-	1
34	MALE/MALE ADAPTOR	1B/4-16	-	1
35	1/4" STEEL BRAIDED HOSE	C.T.S. ON ASSY	-	1
36	MALE/MALE ADAPTOR	1BN/2-4	-	1
37	1" PRICKED HOSE	C.T.S. ON ASSY	-	1

VIEW ON 'X'

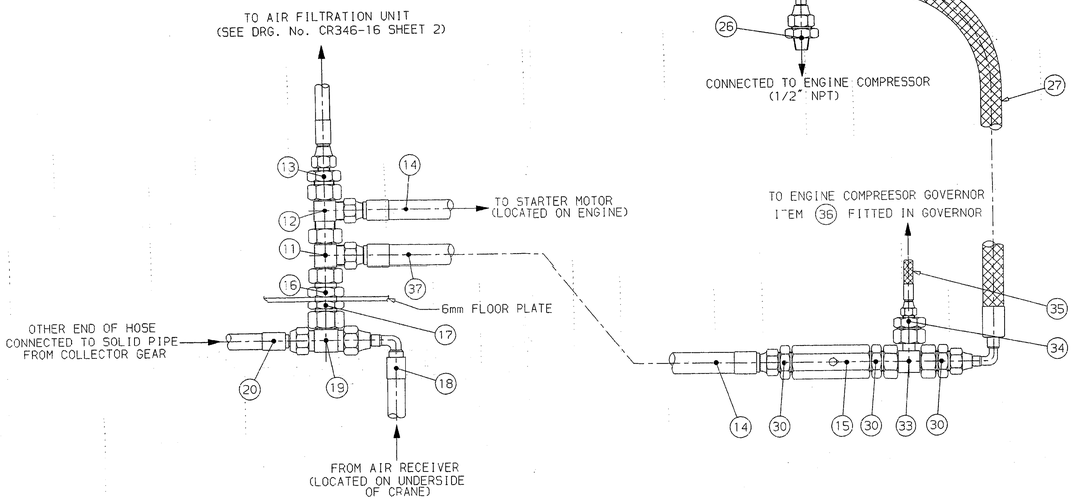

VIEW SHOWING PIPEWORK CONNECTED TO ENGINE COMPRESSOR

SCALE 3:10

VIEW SHOWING PIPEWORK CONNECTED TO ENGINE STARTER MOTOR

SCALE 3:10

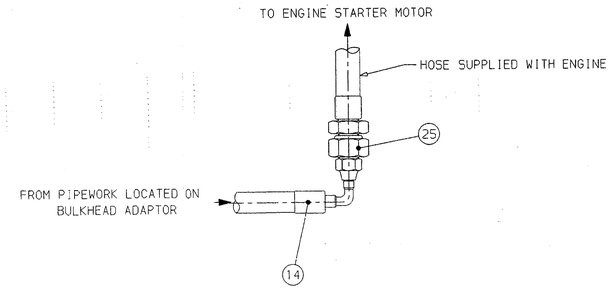

FAVOR CONSULTAR NO SISTEMA, POIS PODERÁ EXISTIR REVISÕES MAIS ATUALIZADAS.

VIEW SHOWING MANIFOLD BLOCK & ASSOCIATED PNEUMATIC PIPEWORK (LOCATED IN POWER MODULE HOUSE)

SCALE 1:2

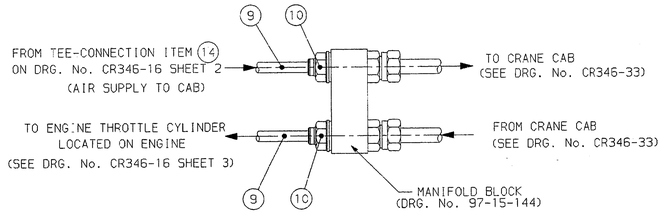

VIEW SHOWING PIPEWORK CONNECTED TO EMERGENCY STOP VALVE (TO BE LOCATED ADJACENT TO REMOTE START VALVE)

SCALE 1:2

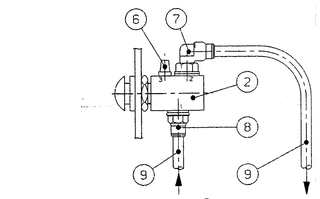

VIEW SHOWING AIR RECEIVER & ASSOCIATED PIPEWORK

SCALE 1:20

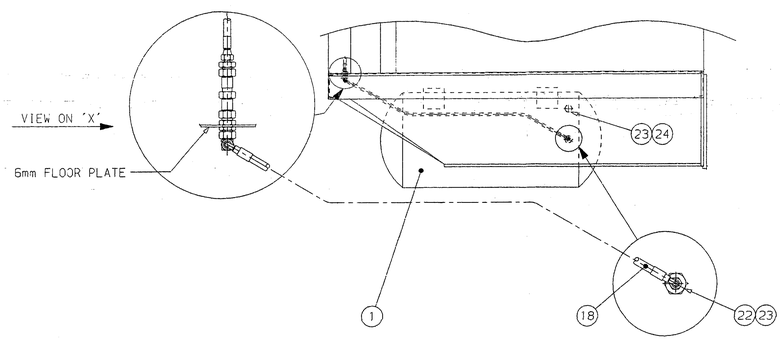

VIEW SHOWING PIPEWORK FROM COLLECTOR GEAR

SCALE 1:20

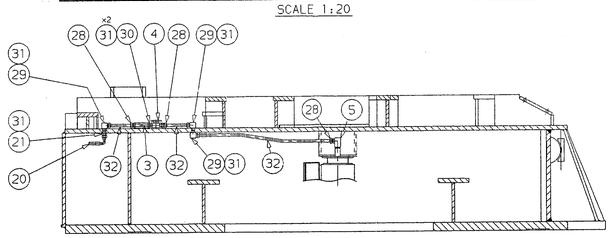

VIEW SHOWING PIPEWORK CONNECTED TO RIGSAVER CYLINDER

SCALE 1:1

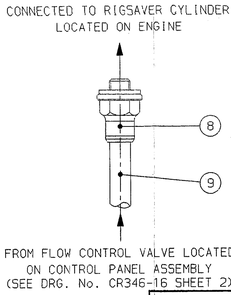

PURCHASER/PROJECT NAME:	**BRASPETRO OIL SERVICES COMPANY BRASOIL FPSO-VIDAL DE NEGREIROS**
PURCHASE ORDER/CONTRACT No	**P.O. VN. GSU-005A/96**
PURCHASE REQUISITION No	**RM-3010.31-21200-631-IVI-001**
EQUIPMENT ITEM No.	**GO 526 002 A**
EQUIPMENT DESIGNATION	**DECK CRANES**

REV	DESCRIPTION	BY/DATE	REV	DESCRIPTION	BY/DATE
A	REDRAWN AS BUILT	G.HALL 29-07-97			

PIPEWORK ASSEMBLY

TOLERANCE APPLICATION
SURFACE SYMBOLS TO BS.308-ISO/R1302
ALL SPECIAL TOLERANCES SHOWN TO BE ADHERED TO.
SYMBOL "6" DENOTES LINEAR SIZES TO BE MAINTAINED.
ALL OTHER DIMENSIONS TO BE WITHIN ±0.5mm UNLESS OTHERWISE STATED.

MATERIAL --.------.--
PATT.No -/-
WEIGHT Kgs
ROUGH -.--
FINISHED -.--

INDUSTRIAL POWER GROUP
CLARKE CHAPMAN MARINE

TITLE PNEUMATIC ASSEMBLY — SHEET 4 OF 4

DRAWN	G.HALL	DATE	25-05-97	DRAWING No.	REV
CHECKED		SCALE	50 DETAILS	XCR346-16SHT4	A

THIRD ANGLE PROJECTION USED ON THIS DRAWING UNLESS NOTED OTHERWISE BY ARROW

DO NOT SCALE - IF IN DOUBT ASK

THIS DRAWING IS THE PROPERTY OF CLARKE CHAPMAN LTD. AND IS DISCLOSED ON THE UNDERSTANDING THAT IT IS KEPT STRICTLY CONFIDENTIAL. IT MUST NOT BE COPIED OR OTHERWISE DISCLOSED WITHOUT PRIOR WRITTEN CONSENT OF CLARKE CHAPMAN LTD.

ITEM No.	QTY.	DESCRIPTION	DRG/IDEN. NO.	REMARKS
1	1	MANIFOLD	CR346-32	
2	1	MANIFOLD	CR346-31	
3	1	PUMP	P24P-2R1C-8A4-A-00-400	
4	1	SHUTTLE VALVE	DSEH-XHN	
5	1	RELIEF VALVE	RDFA-LAN	
6	1	FLOW CONTROL VALVE	DVE-12	
7	1	TEST POINT	2103-01-18.00	
8	1	FLOW CONTROL VALVE		
9	1	FLOW CONTROL VALVE		
10	1	FLEXIBLE HOSE		

PORTS	SIZE
P77-P78	2" SAE 6000
P1-P2	
P125	1/4" BSP
W1-W2	

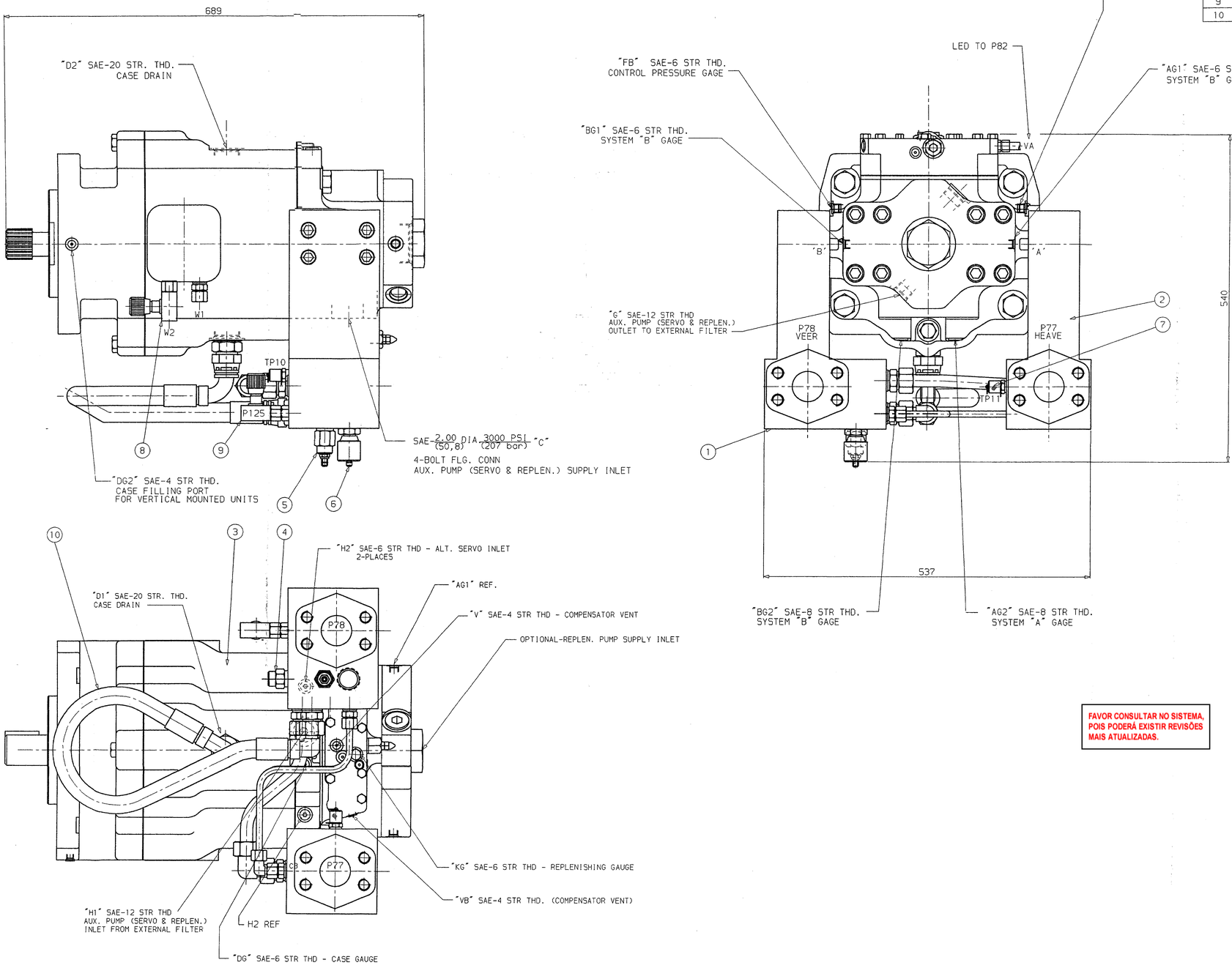

FAVOR CONSULTAR NO SISTEMA, POIS PODERÁ EXISTIR REVISÕES MAIS ATUALIZADAS.

PURCHASER/PROJECT NAME:	BRASPETRO OIL SERVICES COMPANY BRASOIL
	FPSO-VIDAL DE NEGREIROS
PURCHASE ORDER/CONTRACT No	P.O. VN. GSU-005A/98
PURCHASE REQUISITION No	RM-3010.31-21200-631-IVI-001
EQUIPMENT ITEM No.	GD 526 002 A
EQUIPMENT DESIGNATION	DECK CRANES

REV	DESCRIPTION	BY/DATE	REV	DESCRIPTION	BY/DATE

TOLERANCE APPLICATION
SURFACE SYMBOLS TO BS.308-1SO/R1302
ALL SPECIAL TOLERANCES SHOWN TO BE ADHERED TO.
SYMBOL "S" DENOTES LINEAR SIZES TO BE MAINTAINED.
ALL OTHER DIMENSIONS TO BE WITHIN ±0.5mm UNLESS OTHERWISE STATED.

MATERIAL --.------.--
PATT.No -/-
WEIGHT Kgs
ROUGH -.--
FINISHED -.--

INDUSTRIAL POWER GROUP
CLARKE CHAPMAN MARINE

TITLE
ARRGT. OF WHIP HOIST PUMP

DRAWN	M.H.	DATE	20-9-97	DRAWING No.	REV
CHECKED	M.M.	SCALE	1-2.5	CR346-42	0